EZAutomation.net
Innovative Low Cost Automation Equipment Made in America

Manual # EZRPL-USER-M

Getting Started & Hardware Manual

Revision History		
Issue	Date	Description of changes
First Edition	July-2017	Original
Second Edition	Oct-2017	Addition of new I/O modules.

WARNING!

Thank you for purchasing American made automation products from EZAutomation. We want to ensure your new automation equipment works well for your application and also operates safely. Hence we have created this manual so anyone who installs the equipment should read this manual to ensure proper installation and setup.

To minimize the risk of potential safety problems, you should follow all applicable local and national codes that regulate the installation and operation of your equipment. Please note these codes vary from state to state and usually change with time.

Programmable control devices such as EZRack PLC are not designed, manufactured or intended for use as on-line control equipment in hazardous environments requiring fail-safe performance, in which the failure of the product could lead directly to death, personal injury, or severe physical or environmental damage. Unless proper safeguards are used, unwanted start-ups could result in equipment damage or personal injury. The operator must be made aware of this hazard and appropriate precautions must be taken.

The diagrams and examples in this user manual are included for illustrative purposes only. We do not assume responsibility or liability for your product design, installation or operation. If you have any questions concerning the installation or operation of this equipment, please call us at 1-877-774-EASY (3279).

Trademarks

This publication may contain references to products produced and/or offered by other companies. The product and company names may be trademarked and are the sole property of their respective owners. EZAutomation disclaims any proprietary interest in the marks and names of others.

© Copyright 2017, EZAutomation
All Rights Reserved

No part of this manual shall be copied, reproduced, or transmitted in any way without the prior written consent of EZAutomation. EZAutomation retains the exclusive rights to all information included in this document.

Designed, Manufactured and Distributed by EZAutomation
4140 Utica Ridge Rd. Bettendorf, IA 52722-1327
Phone: 1-877-774-3279 (EASY)
Fax: 1-877-775-3279
www.EZAutomation.net

Table of Contents:

Cover/Warnings/Trademarks

Table of Contents i
EU Information ii
Technical Support ii
Environmental Specifications ii
Preventative Maintenance and cleaning ii

CHAPTER 1 - GETTING STARTED WITH HARDWARE

1.1 Introduction 1-7
1.2 Purpose of the Manual… 1-8
1.3 EZRack PLC System Overview… 1-9
1.4 Quick and EZ System Overview… 1-10
1.5 How to configure the EZRACK PLC System … 1-11
1.6 How to design the most efficient EZRack PLC System 1-12
1.7 Unpacking the EZRack PLC 1-14
1.8 Powering up EZRack PLC with AC or DC Models 1-15

CHAPTER 2 - INSTALLATION

2.1 Safety Considerations… 2-17
2.2 Installation Considerations… 2-18
2.2a Environmental Specification Table 2-18
2.3 Electrical Considerations… 2-20
2.3a Cabling, Shielding and Grounding for EZRack PLC 2-21
2.4 Sourcing (P type) and Sinking (N type) I/O… 2-26
2.5 EZRack PLC Mounting… 2-28
2.6 EZRack PLC IO Modules Positioning… 2-30
2.7 EZRack PLC IO Mounting and Wiring… 2-30
2.8 EZRack PLC I/O Modules Specifications … 2-31
2.8a Discrete DC Modules 2-31
EZRPL-IO-16DCI DC Sinking/Sourcing Input 2-31
EZRPL-IO-16DCOP DC Sourcing Output 2-32
EZRPL-IO-16DCON DC Sinking Output 2-33
2.8b Discrete AC Modules 2-34
EZRPL-IO-8ACI AC Input 2-34
EZRPL-IO-8ACO AC Output 2-35
EZRPL-IO-4ACI4ACO AC Input / Output Combo 2-36
2.8c Relay Modules 2-37
EZRPL-IO-8RLO Isolated Relay Outputs 2-37
EZRPL-IO-4DCOP4RLO Isolated Relay & DC Sourcing Outputs 2-38
2.8d Analog Modules 2-39
EZRPL-IO-8ANI4ANOV Voltage Analog Input/Output (12-Bit) 2-39
EZRPL-IO-8ANI4ANOC Current Analog Input/Output (12-Bit) 2-40
EZRPL-IO-4RTD Resistance Temperature Detector 2-41
EZRPL-IO-8ANI4ANOV-16BIT Analog In/Out - Voltage (16-Bit)…. 2-42
EZRPL-4THIE Thermocouple Input Module 2-43
2.8e Specialty Modules 2-44
EZRPL-IO-HSCNT High Speed Counter Inputs with Fast DC/PLS Outputs 2-44
EZRPL-IO-6DI4DO-2ANI2ANOC Discrete and Analog Current Combo 2-46
EZRPL-IO-8DCOP-HC DC Sourcing Output, High Current. 2-48

CHAPTER 3 - SPECIFICATIONS, CPU OPERATION, PLC MODES AND MEMORY MAPPING

3.1 EZRack PLC Bases, CPU and I/O Module part numbers 3-50
3.2 EZRack PLC Accessories 3-51
3.3 EZRack PLC CPU Specifications 3-52
3.4 CPU Overview 3-53
3.5 CPU Status Indication LEDs 3-54
3.6 Battery Backup 3-56
3.7 CPU Operation Sequence 3-57
3.8 I/O Response Time 3-58
3.9 Memory Mapping 3-61
3.9a Memory Map Table 3-64
3.9b System Discretes 3-64
3.9c System Registers 3-65

CHAPTER 4 – QUICK START GUIDE (EZRACK PLC DESIGNER PRO)

4.1 EZRack PLC Designer Pro Software Requirements & Installation 4-68
4.2 Creating a New Project and Transfer to EZRack PLC 4-75

EZAutomation

1

Chapter 1: Getting Started

In this Chapter…

1.1 Introduction 1-7
1.2 Purpose of the Manual… 1-8
1.3 EZRack PLC System Overview… 1-9
1.4 Quick and EZ System Overview… 1-10
1.5 How to configure the EZRACK PLC System … 1-11
1.6 How to design the most efficient EZRack PLC System 1-12
1.7 Unpacking the EZRack PLC 1-14
1.8 Powering up EZRack PLC with AC or DC Models … 1-15

1.1 Introduction

Welcome to EZAutomation's new programmable logic controller (PLC), the EZRack PLC

EZAutomation and its parent company AVG Advanced Technologies, with a 49-year-old tradition of manufacturing more than 500 high value and most innovative automation products Made in the USA, welcomes you to the EZRack PLC family of products.

EZAutomation is well known in the automation industry for its innovative HMI Operator Interface, the EZTouch®, but its sister company, Uticor Technologies, formerly Struthers Dunn Systems division, has been at the forefront of PLCs, welding controls, message displays since 1968. Uticor, in fact, was one of the early inventors of PLCs back in 1968. It held numerous patents on PLCs, then called Process Control Computers and received a patent on these devices back in 1973.

With AVG's rich history in automation controls, almost half a century of experience in electronics manufacturing, and innovation thru the EZAutomation division, we are now proud to present a low-cost, innovative Programmable Automation Controller Made in America, with cutting edge technology and features, the EZRack PLC

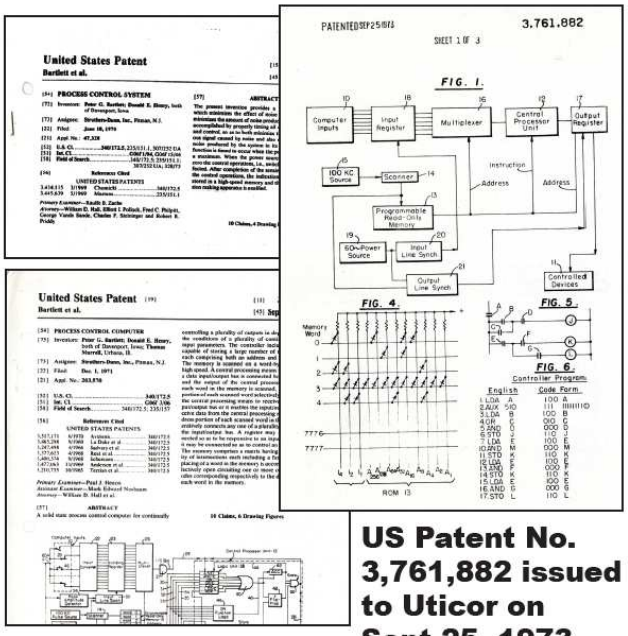

US Patent No. 3,761,882 issued to Uticor on Sept 25, 1973

Describing the first time use of programmable memories in PLCs

1.2 Purpose of the manual

This manual is presented with details and step-by-step information on the Installation and Programming of a new EZRack PLC Programmable Controller. It also covers the troubleshooting and maintenance of an existing setup, if present, and provides an understanding of how to connect a EZRack PLC with other components in your control system.

This manual is a good reference guide for personnel who install and /or program EZRack PLCs. The manual also includes important information about power and signal wiring, mounting of the CPU, and configuring the CPU system.

Where should I Start?

If you are already familiar with basic PLC concepts, you may choose to start with *Chapter 2, Hardware Installation*. New customers may find it more useful to get acquainted with the features of the EZRack PLC first. The *Quick and EZ Start to get familiar with* EZRack PLC section of this manual is also a good starting point, for both experienced and new users.

Where to get HELP - Technical Support

We make every effort to keep our manuals short and simple, yet detailed enough to answer your application requirements. We always appreciate all types of feedback so we can constantly improve our products and manuals. If you need additional technical assistance, please call us at:

1-877-774-EASY (3279)

Our experienced Technical Support Engineers, located in the USA, are available Monday through Friday 6A.M. to 12 midnight CST. You can also reach us at 1-563-650-8112 on the weekends for emergency technical support.

You can also visit our website for online resources with specific technical information about a wide array of our products. The EZEducation resource is a great addition to the website with product videos, technical documentation of application notes and programming examples.

www.EZAutomation.net

1.3 EZRack PLC System Overview

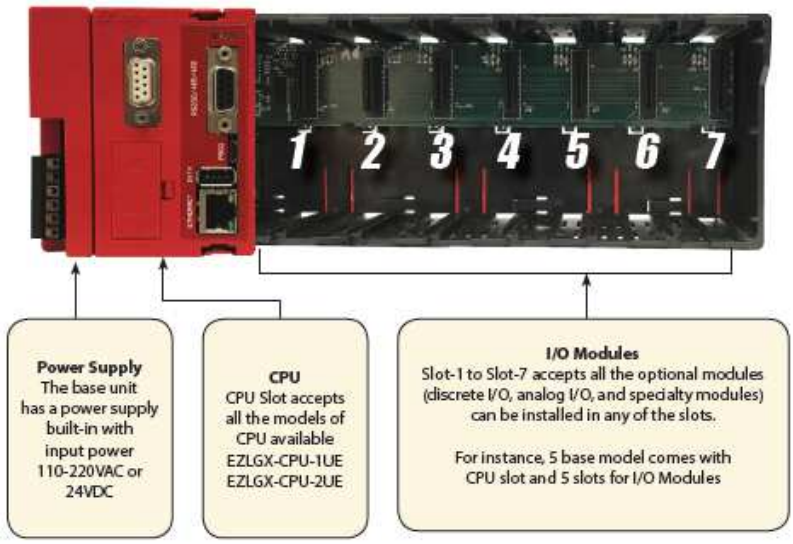

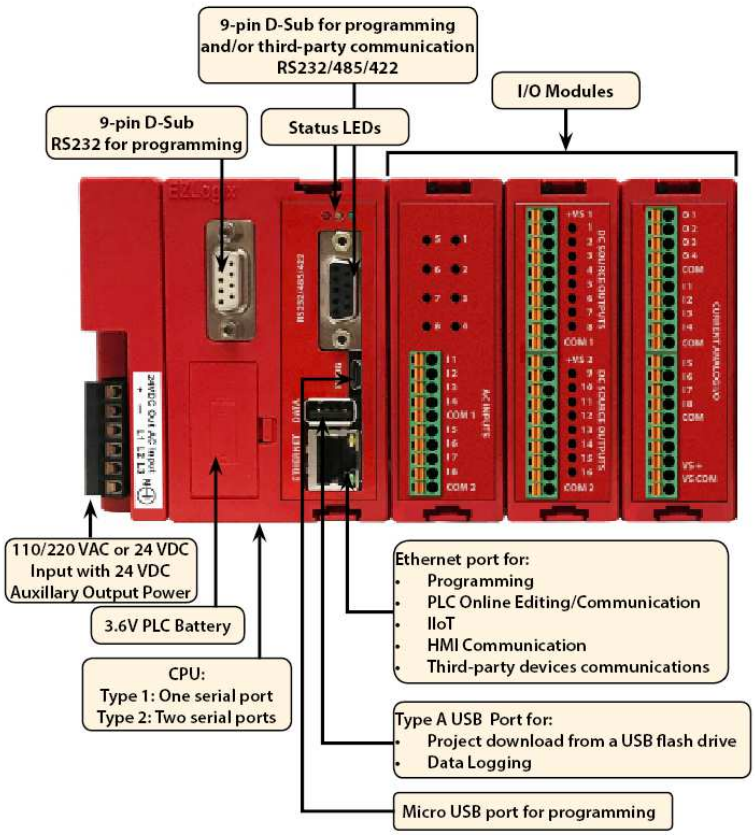

1.4 Quick and EZ System Review

EZRack PLC Base

The EZRack PLC bases are available in 3 models; 3, 5, or 7 slots and are capable of flexibly incorporating 48, 80 or 112 I/O points respectively with the current I/O modules available. (Higher density, i.e. 32 Point I/O modules will be released in the future). Every EZRack PLC Base comes equipped with a built-in power supply so no extra hardware is requited to power it up! They are available in either 24 VDC or 110/220 VAC power input.

EZRack PLC CPU

EZRack PLC CPU comes in 2 models. Either with 1 or 2 serial ports. Every CPU has a built-in Ethernet port, USB port for data logging, micro USB port for programming, and slots for I/O modules. The CPU also comes with a battery which is used for maintenance of the Real Time Clock and Retentive Tags. The PLC program is stored in non-volatile Flash.

I/O Configuration

EZRack PLC has the “Auto Configure” option, which can auto detect the I/O’s plugged in its base.

I/O Modules

All EZRack PLC PLCs utilize plug-in I/O modules for its I/O requirements. I/O modules are not included with EZRack PLC bases and need to be purchased separately. All the bases in EZRack PLC series can be equipped with any I/O modules. I/O modules are available for DC, AC, Analog, Thermocouple, High speed counter and Relay type IO requirements. As you can see from the I/O options on the next page, there are a number of Mix-n-Match I/Os.

1.5 How to Configure your EZRack PLC System

a) Choose your EZRack PLC base

EZRack PLC Base & Power Supply Specifications						
Specifications	AC Powered Bases			DC Powered Bases		
Part Numbers	EZRPL-AC-03B	EZRPL-AC-05B	EZRPL-AC-07B	EZRPL-DC-03B	EZRPL-DC-05B	EZRPL-DC-07B
Input Voltage Range	110 / 220 VAC (90-265VAC)			24VDC (20-28VDC)		
Number of Slots	3 Slot Base	5 Slot Base	7 Slot Base	3 Slot Base	5 Slot Base	7 Slot Base

b) Choose your CPU

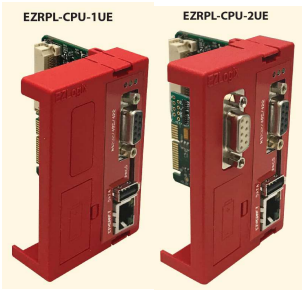

c) Choose your I/O modules

- EZRPL-IO-16DCI (16 pt. 24VDC Digital Input)
- EZRPL-IO-16DCOP (16 pt. 24VDC Digital Output - sourcing)
- EZRPL-IO-16DCON (16 pt. 24VDC Digital Output - sinking)
- EZRPL-IO-4ACI4ACO (4 pt. 110VAC In, 4 pt. 110VAC Out)
- EZRPL-IO-8ACI (8 pt. 110VAC Digital Input)
- EZRPL-IO-8ACO (8 pt. 110VAC Digital Output)
- EZRPL-IO-8RLO (8 pt. Relay Output)
- EZRPL-IO-4DCOP4RLO (4 pt. DC Output sourcing 4 pt. Relay Output)
- EZRPL-IO-8ANI4ANOV (8 pt. Analog Input, 4 pt. Analog Output - Voltage)
- EZRPL-IO-8ANI4ANOC (8 pt. Analog Input, 4 pt. Analog Output - Current)
- EZRPL-IO-4RTD (4 pt. Temperature input module, RTD)
- EZRPL-IO-8ANI4ANOV-16BIT (8 pt. Analog Input, 4 pt. Analog Output - Voltage)
- EZRPL-IO-4THIE (4 pt. Thermocouple Input Module)

- EZRPL-IO-HSCNT (High Speed Counter Inputs with fast DC/PLS Outputs)
- EZRPL-IO-6DI4DO-2ANI2ANOC (6 pt. 24VDC Digital Input, 4 pt. 24VDC Digital Outputs, 2 Analog Inputs, 2 Analog Outputs – Current with 12 Bit Resolution)
- EZRPL-IO-8DCOP-HC (8 pt. 24VDC Digital Output, High Current [3 Amps / Point])

1.6 How to design the most efficient EZRack PLC system.

When designing your control system, keep the following recommendations in mind to design the most efficient and powerful EZRack PLC system:

1. Take Advantage of our Mix-n-Match I/O

One key advantage of using EZRack PLC is it's extremely flexible I/O. In order to figure out the most cost effective setup for your application, first figure out the I/O requirements for your control system. Figure out your most commonly used and most cost effective switches, solenoids, sensors, etc. Once you have a good idea of all of these devices that you are going to use, then pick I/O to match your configuration instead of trying to match your configuration to the available I/O as you would do with most other PLCs. There is practically no configuration of I/O that EZRack PLC cannot handle. EZIO is available in efficient blocks of 16 points with AC/DC combo modules, AC/DC with Relay, Analog combo and many more to match any configuration.

2 Fast Scan Time

Need fast response time for your control system? EZRack PLC has a fast scan time, an average of 2.4ms for 1K Boolean instructions and all other associated overhead. Typical PLCs with this type of processing power are at least 5 times the price!

3. No Power Budgeting

With EZRack PLC, you will have the absolute peace of mind when picking I/O modules for your control system. EZRack PLC do NOT require any power budgeting whatsoever. You can practically pick out any EZRack PLC IO module in any combination without having to worry about power constraints.

4. Rich Instruction Set and Patent Pending Free Flow Logic

Before you start designing your control system, just take a couple of moments to understand EZRack PLC's rich yet concise instruction set. It has advanced function block instructions to save you extensive programming time. A Relay Ladder Logic program (RLL) designed in another PLC might require 100 rungs where EZRack PLC can perform the same functionality by utilizing subroutines and using our patent-pending Free Flow Logic in just a couple of rungs.

5. *500,000 Words User Memory*

Regardless of the size of the EZRack PLC you purchased, all models have an abundant 500,000 instruction words of total memory available for the PLC program. With this amount of available memory, you can now design practically any size of RLL program without ever having to worry about memory shortage. You can create large databases, huge recipes, multiple PIDs etc.

6. *16354 Registers and Variables*

There is no shortage of the numbers of variables (tags) and registers in the EZRack PLC Therefore, you do not have to worry about running out of registers and accordingly plan your design.

7. *Integrated Data-Logging*

   With EZRack PLC built-in data log function block instruction and up to 64 GB of data storage on a USB thumb drive you essentially have limitless data storage of all critical and non-essential values such as production data, alarms, faults etc.

8. *IIoT Ready*

   EZRack PLC CPU comes with MQTT protocol support making it easy and secure to send PLC data to the cloud or on a network using EZAutomation's IIoT, Free customized Client Utility. The EZRack PLC CPU acts as a "Publisher" which can be used with any open source "Broker". For more details, please review EZRack PLC IIoT application notes and getting started documents.

1.7 Unpacking the EZRack PLC

Step 1: When you open your new EZRack PLC PLC, you will see that it comes pre-installed in the respective PLC base and CPU you configured. It also has all blank I/O modules (EZRPL-IO-BLANK), so in case you do not fill up all the module slots, your EZRack PLC PLC is ready to go. No need to buy extra filler modules!

Step 2: Remove any blank modules by pressing on the top and bottom tabs and pulling out from the base. Replace blank module with one of the EZRack PLC I/O modules. When inserting the EZRack PLC I/O module make sure to line up the module on the "guiding slot" and press firmly till it snaps to the PLC base.

Step 3: Whichever I/O slots you do not occupy with an EZRack PLC I/O module, keep the blank module in place and you are ready to go!

1.8 Powering up EZRack PLC with AC or DC Models

Note: On DC Models the + and – terminals are internally shorted so that you can also have 24VDC output to connect an HMI or external device requiring 24VDC.

Note: On AC Models, “L” is your Input Line and “N” is Neutral. 24VDC output is also available to power an HMI or external device requiring 24VDC.

NC = No Connection

⏚ = Earth Ground

EZRack PLC Base & Power Supply Specifications						
Specifications	AC Powered Bases			DC Powered Bases		
Part Numbers	EZRPL-AC-03B	EZRPL-AC-05B	EZRPL-AC-07B	EZRPL-DC-03B	EZRPL-DC-05B	EZRPL-DC-07B
Input Voltage Range	110 / 220 VAC (90-265VAC)			24VDC (20-28VDC)		
Number of Slots	3 Slot Base	5 Slot Base	7 Slot Base	3 Slot Base	5 Slot Base	7 Slot Base
Auxiliary 24 VDC Output	800mA					
Maximum Inrush Current	1 Amp					
Maximum Power Consumption	10 Watts					
Opearating Temp.	-20 to 60°C (-4 to 140° F)					
Storage Temp.	-40 to 85°C (-40 to 185° F)					
Price	***$99***	***$119***	***$139***	***$119***	***$129***	***$149***

EZAutomation

2

Chapter 2: Installation

In this Chapter…

2.1 Safety Considerations… 2-17
2.2 Installation Considerations… 2-18
2.2a Environmental Specification Table 2-18
2.3 Electrical Considerations… 2-20
2.3a Cabling, Shielding and Grounding for EZRack PLC 2-21
2.4 Sourcing (P type) and Sinking (N type) I/O… 2-26
2.5 EZRack PLC Mounting … 2-28
2.6 EZRack PLC IO Modules Positioning 2-30
2.7 EZRack PLC IO Mounting and Wiring … 2-30
2.8 EZRack PLC I/O Modules Specifications 2-31
2.8a Discrete DC Modules 2-31
EZRPL-IO-16DCI DC Sinking/Sourcing Input 2-31
EZRPL-IO-16DCOP DC Sourcing Output 2-32
EZRPL-IO-16DCON DC Sinking Output 2-33
2.8b Discrete AC Modules 2-34
EZRPL-IO-8ACI AC Input 2-34
EZRPL-IO-8ACO AC Output..... 2-35
EZRPL-IO-4ACI4ACO AC Input / Output Combo..... 2-36
2.8c Relay Modules..... 2-37
EZRPL-IO-8RLO Isolated Relay Outputs 2-37
EZRPL-IO-4DCOP4RLO Isolated Relay & DC Sourcing Outputs 2-38
2.8d Analog Modules 2-39
EZRPL-IO-8ANI4ANOV Voltage Analog Input/Output (12-Bit) 2-39
EZRPL-IO-8ANI4ANOC Current Analog Input/Output (12-Bit) 2-40
EZRPL-IO-4RTD Resistance Temperature Detector 2-41
EZRPL-IO-8ANI4ANOV-16BIT Analog In/Out - Voltage (16-Bit).... 2-42
EZRPL-4THIE Thermocouple Input Module 2-43
2.8e Specialty Modules 2-44
EZRPL-IO-HSCNT High Speed Counter Inputs with Fast DC/PLS Outputs.....2-44
EZRPL-IO-6DI4DO-2ANI2ANOC Discrete and Analog Current Combo.....2-46
EZRPL-IO-8DCOP-HC DC Sourcing Output, High Current 2-48

2.1 Safety Considerations

Please follow all applicable sections of the National Fire Code, National Electrical Code, and the codes of the National Electrical Manufacturer's Association (NEMA) to ensure maximum safety of the equipment and personnel.

Plan for Safety

It is an absolute must to follow all applicable sections of:

- The National Fire Code
- The National Electrical Code (NEC)
- The National Electrical Manufacturer's Association (NEMA) codes.

Local regulatory and government offices usually provide excellent help to determine which codes and standards are necessary for safe installation and operation. Please note these codes may change from time to time, so it is the responsibility of the user to keep up to date.

Safety Techniques

Safety is the most important element of a proper system installation. Adhering to these safety considerations ensures the safety of yourself and others, as well as the condition of your equipment. We recommend reviewing the following safety considerations:

1) *Disconnecting Main Power*
   The main power switch should be easily accessible to the operators and maintenance personnel. It is important to make sure that all other sources of power, including pneumatic and hydraulic, are de-energized before starting the work on a machine or process controlled by a PLC.

2) *Safety Circuits*
   Most of the machines are installed with safety circuits, like Limit switches, Emergency stop push buttons, and Interlocks. These circuits should always be hard-wired directly to the PLC. These devices must be wired in series so that when any one device opens, the PLC is automatically de-energized. This removes power to the machine. These circuits should not be altered in any case, since serious injury or machine damage could result.

3) *Fail-Safe Operation*
   Our products are not fault-tolerant and are not designed or intended for use as on-line control equipment in hazardous environments requiring fail-safe performance, such as in operation of nuclear facilities, aircraft navigation or communication systems, air traffic control, direct life-support machines, weapons systems, clutch control systems on presses, in which the failure of the product could lead directly to death, personal injury or severe physical or environ- mental damage. External fail safe and/or redundant components are required to make your control system Fail-safe.

2.2 Installation Considerations

EZAutomation products have been designed and tested for operation in the most demanding industrial environments. Modern solid-state industrial controls are complex electronic equipment that operate at low levels of voltage and current, coexisting with components that operate at much higher levels of power. The difference in operating power characteristics between the high and low power control devices creates the possibility of unwanted signals being generated causing interference. The interference, which is a by-product of electrical noise, is not present at all times. However, it appears at random and during brief periods of time it can cause disruptions and errors in the operation of a control system.

Enhancement of a system's noise level immunity, and its tolerance to other environmental hazards can be accomplished by following proper system installation guidelines. The recommendations are of a general nature and constitute good industrial installation practice.

General Environmental Installation Considerations

Avoid installing EZRack PLC in areas where the following conditions may exist:

- Environmental temperatures above or below those specified by the EZRack PLC
- Prolonged exposure to humidity and liquids which may be sprayed or splashed on the equipment.
- Dusty environments where airborne particles may accumulate on equipment causing reduction of heat dissipation, and reduction in effective electrical spacing between components.
- Areas of excessive vibration above EZRack PLC specs.
- Areas of high-radiated electrical noise, such as near fields of transmitting antennas and areas in close proximity of arc welding stations.

2.2a Environmental Specifications

The following table lists the environmental specifications that generally apply to the EZRack PLC CPU, Bases and I/O modules.

Parameter	Ratings
Operating Temperature	-20 to 60°C (-4 to 140° F)
Storage Temperature	-40 to 85°C (-40 to 185° F)
Humidity	10 to 95% Relative Humidity, Non-condensing
Vibration Resistance	2g @ 10...500 Hz (IEC 60068-2-6)
Shock Resistance	Up to 30g (IEC 60068-2-27)
Electrical Noise (ESD Immunity)	6kV contact discharge (IEC 61000-4-2)
Atmospheric Conditions	Non-corrosive gases

Agency Approvals

Your application may require agency approval. EZRack PLC's agency approvals are:

- UL (Underwriter's Laboratories, Inc)
- CUL (Canadian Underwriter's Laboratories, Inc)
- CE (EU Certification)

Physical Layout of EZRack PLC in Control Cabinets

When possible, cabinets housing electronic equipment should be designed with provisions for natural or forced ventilation to facilitate heat dissipation. Observe the following rules for cabinet installation:

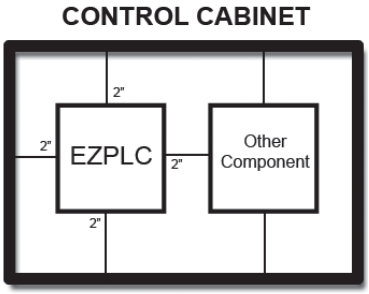

Also 2" from door or cover of the cabinet

- Heat generating equipment (power supplies and other heat inducing components) should be installed toward the top of the cabinet. The lower space in the cabinet is cooler than the top area.
- Install heat-sensitive components in the lower section.
- Provide enough space between components to allow a free flow of air for better heat dissipation.
- Provide the maximum possible physical separation between solid state and electromechanical controls. If possible, the electromechanical controls (motors, starters, solenoids, etc.) should be housed separately or at the farthest point when enclosed within the cabinet.

2.3 Electrical Considerations

Understanding Electrical Noise, Optical Isolation, and Shielding of Cables.
This section will provide you with a very basic understanding of Electrical Noise and how to keep it away from CPUs.

1. **Source of Electrical Noise**
   Industrial plants that have a number of generators of electrical noise are sometimes also referred to as Radio Frequency Interference or RFI. Anytime an inductive load like a motor, motor starter, or solenoid is turned off, it generates a burst of excess energy that has to flow back to ground, just like electrical energy from a lightning storm has to flow back to Earth. Other sources are RF Welders or Radio Transmitters. RFI is short bursts of electrical energy at very high frequencies.

2. **Effect of RFI on Electronic Automation Equipment**
   Electronic controls use faster and faster CPUs today. These CPUs are also operating at 2.5V to 5VDC logic level power supply. RFI, if allowed to enter the CPU inside, is a killer of logic. A CPU under this environment loses its brain and behaves erratically. The EZRack PLC has been designed to protect false outputs, by using proper isolation design components that if faced with extreme RFI above given specs, will halt its operation, thus engendering a safe shut-down.

3. **How to keep RFI Isolated from CPU's**

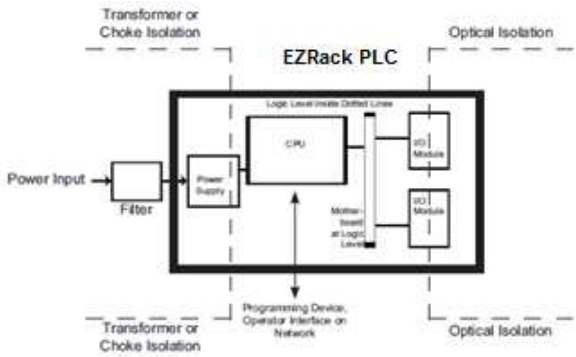

Cabinets
Equipment cabinets usually incorporate one or two doors and/or hinged cabinet panels. In addition, sub-panels may be utilized on those electronic controls and electromechanical items that are mounted.
The goal here is to create a medium for mounting the equipment and ensure grounding of the control's chassis to it. Relying on door hinges and swinging panels for a good metallic bond between hinged parts and the main body of the cabinet does not insure adequate grounding. That is why the use of ground straps is recommended.

RFI enters electronic controls in two ways:

• Radiated RFI
• Conducted RFI

For most practical purposes, electronic devices, unless sitting right next to a powerful RFI transmitter, will not be affected by noise because air space severely attenuates such interference. On the other hand, conducted RFI travels over conductive surfaces such as power supply wires, electrical wiring of field devices, and worst of all; improper ground planes.

It is a common practice with PLCs to isolate the sensitive CPU of the PLC from RFI by providing Transformer or Choke Isolation on the Power Supply and optical isolation at the I/O side. EZRACK PLC isolates the conducted RFI by both means, transformer/choke isolation as well as optical isolation for I/O modules.

2.3a Cabling, Shielding, and Grounding for EZRack PLC

It is vital for the reliable operation of any electronic device to have any of its metallic surface well-grounded to Earth. This not only provides for safe operation, it also will drain out any conducted RFI to Earth, away from the CPU's signal ground. Obviously, the metal cabinet housing the EZRACK PLC should also be well grounded. The following section will detail these procedures. Power cables, I/O cables or wiring and communication cables should all be separate so that they do not couple the conducted RFI on any of these wires/cables. Another path for RFI into the EZRack PLC is through its RS232 and RS422/485 ports. The cables to these ports must be shielded properly as shown in the following diagrams.

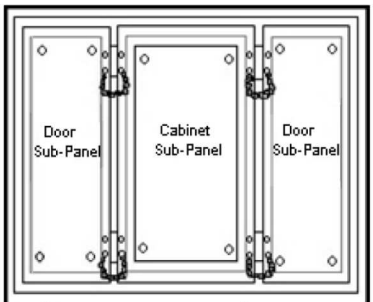

Cabinet Door Grounding Straps

Cabinet Grounding

Equipment cabinets usually incorporate one or two doors and/or hinged cabinet panels. In addition, sub-panels may be utilized on those electronic controls and electromechanical items that are mounted.

The goal is to create a medium for mounting the equipment and ensure grounding of the control's chassis to it. Relying on door hinges and swinging panels for a good metallic bond between hinged parts and the main body of the cabinet does not insure adequate grounding. That is why the use of ground straps is recommended.

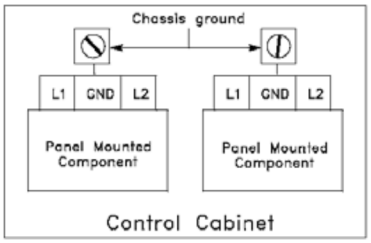

The equipment enclosures are generally either painted or anodized. It is imperative that the equipment chassis are grounded. Not only is this good safety practice, but it also helps noise immunity problems. Mounting of painted or anodized enclosures to like surfaces does not insure good metallic contact between the equipment chassis and cabinet.

The use of star washers when mounting the EZRACK PLC, or other components, provides sufficient grounding on the panel.

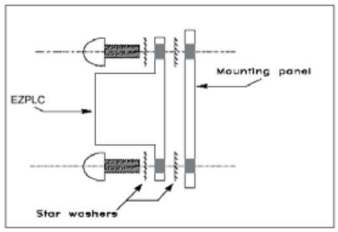

Cabinet Wiring

The wiring of the EZRack PLC to the "field" outside the cabinet must be by design. The wiring cannot be random in order to get the various points of the cabinet and the "field" electrically connected.

Some general rules that apply in most situations:

Provide a separate power source to electronic controls and keep this power buss away from any I/O power.

- The cabinet should be wired with a safety ground (the main safety ground wire gauge is determined by the cabinet's total current consumption) and in accordance with all electrical code requirements.
- Once the cabinet doors, stationary sub-panels and swing-out subpanels have been "strapped" to the main cabinet, it is not necessary to run safety ground wires from the equipment chassis terminals to the main safety ground connection.
- The safety ground terminal of each component can, and should be, connected with the shortest wire possible, to the cabinet or sub-panel frame.
- Plan the wiring routing. Keep all switched power in separate ducts and if there is AC and DC power being switched, keep the wiring of each branch separate from all wires and cables carrying low level signals.
- Keep all three-phase power outside of the cabinet, but if it becomes necessary, keep the runs as short as possible and maintain the maximum possible distance between the three-phase bus and all other wiring.

AC/DC Transient Protection

Recommended AC Inductive Transient Protection

CAUTION! *MOV should be 2 times the load voltage and have sufficient energy rating corresponding to the load.*

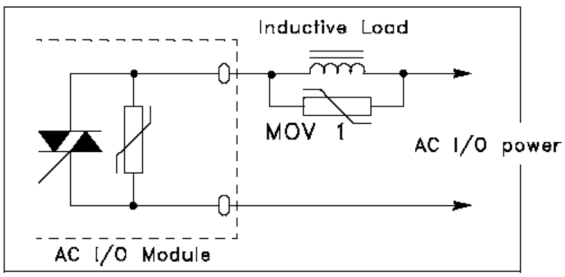

Recommended DC Sinking Transient Protection

CAUTION! *D1 should have at least 100 PIV and 3 Amp current capacity.*

CAUTION! *EZRack PLC's DC outputs have a built-in fly back diode to absorb an inductive kick. For this Diode to work effectively, the 24VDC power source powering the inductive load must be connected to the I/O module. Use these recommended external suppressors for improved safety.*

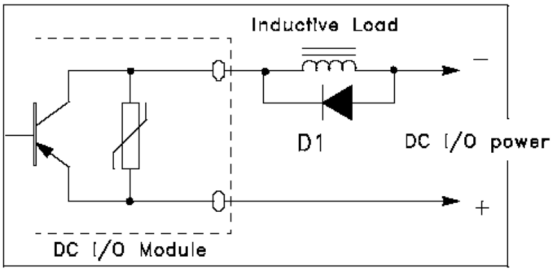

- Primary power leads to the control equipment (Base power terminals) should be made with a two wire twisted cable with approximately 12 turns per foot. The length of these cables should be kept to a minimum and to the greatest extent possible such cable runs should be kept separate from other wiring.
- In the case of AC powered equipment, the primary power should be provided separately from the power source used for I/O control.

AC Line Noise

The AC power available in house outlets and at sub-stations powering industrial and commercial applications is generally generated at a power station miles away from the point of usage.
The power is "noise" free at the time it is being generated, and meets all specifications for amplitude, frequency, harmonic distortion and others.
However, the same specifications cannot be guaranteed at the point of usage, due to the disruptive factors associated with the transmission from generator to consumer.

While the generated power output starts its journey "clean," and free of noise, it is "polluted" by radio and TV frequencies, spikes from reactive kickbacks due to switching heavy inductive and capacitive loads in transmission lines, and from other interference.

As a result, critical and sophisticated electronic controls may malfunction; false triggering, user program loss and/or modification may occur and even catastrophic failure.

In view of the problems associated with AC power, it is strongly recommended the source, transmission and final end use be given stringent consideration before any commitment to supply the system is given. Some typical problems in power line usage are:

- Blackouts: This is the total loss of power. Generally, they are easy to detect and if a situation arises where they cannot be tolerated then an un-interrupted power supply (UPS) should be

used.

- Brownouts: This occurs when there is a reduction in line voltage amplitude. If this reduction falls within operating limits, no adverse effects will be experienced. However, if they are frequent and severe, a UPS system should be considered.

- Voltage Fluctuations: These are amplitude variations (rapid or slow) and can occur above or below the specified limits. Over-voltage conditions may damage equipment if the duration of the voltage condition is lengthy. It may cause disruptions, data loss, and production down-time.

- Noise Spikes: Noise spikes and other unwanted signals superimposed on the AC line voltage waveform are the most common problems associated with the distribution of the power from its grid system. The amplitude of these signals can be from several hundred to a few thousand volts and the pulse width from about one to 200 microseconds. Because of their short duration and random occurrences, these harmful signals are difficult to detect.

Dealing with AC Line Noise

The best option to effectively eliminate or greatly reduce voltage fluctuations, spikes and line noise is through the use of isolation, constant voltage or power line conditioner transformer.
Isolation transformers are passive devices that do not have DC paths between the circuits they isolate. The transformer provides attenuation to spikes and common mode noise, but has virtually no effect on transverse mode noise and does not provide protection for voltage fluctuations.

Constant voltage transformers are static Ferro-resonant transformers that can accept fluctuating AC voltage input (within a specified range) and maintain a constant voltage output. The transformers provide good attenuation to transverse mode type noise, however, are ineffective for attenuation of common mode type signals.

Power line conditioning transformers provide good line regulation and are effective in providing attenuation to both common and transverse mode types of noise.

All of the mentioned transformer types are available by various manufacturers including EZAutomation and they come in different varieties of operating voltages, power ratings, and frequencies.

CAUTION! *Do not apply AC power to DC models or Vice versa.*

CAUTION! *Keep the signal GND for CPU Power and I/O Power isolated.*

NOTE: *Industrial Power Supplies today are relatively inexpensive. Any good industrial DC Power Source has an EMI filter built-in. An I/O DC Power Supply does not have to be that well-regulated on the other hand.*

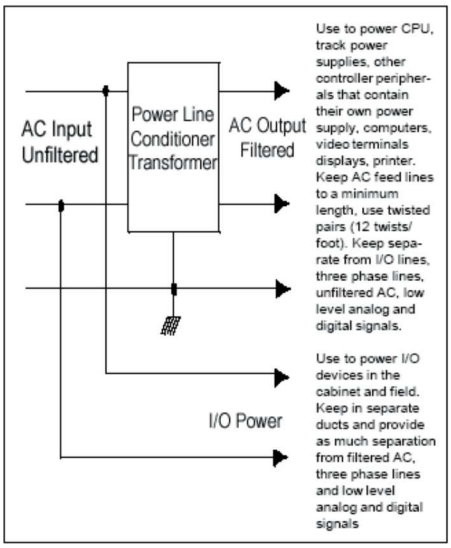

DC Powered EZRack PLC System
If you are using 24VDC for DC Power for the EZRack PLC, we recommend that the power for the CPU be a separate Power Supply and the power source for DC Loads be a DC Load supply.

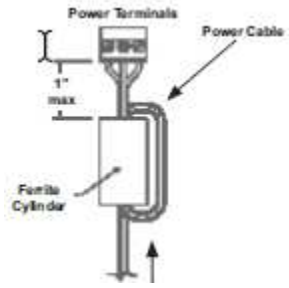

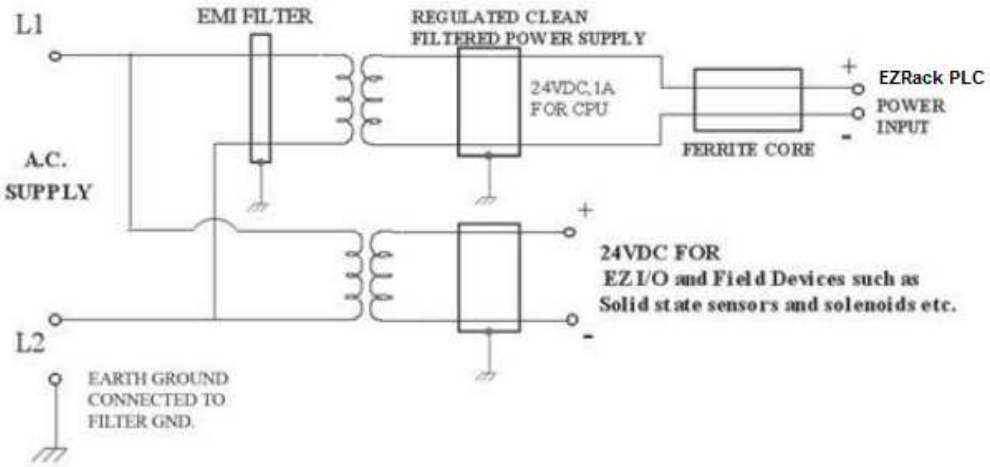

2.4 Sourcing (P type) and Sinking (N Type) I/O

You will come across these two terms quite often in the world of automation controls. This section will give you a short explanation and a simple way to remember the terminology.
Source (P type) Sources Voltage to the receiver
Source (N type) Sinks current through the load into GND

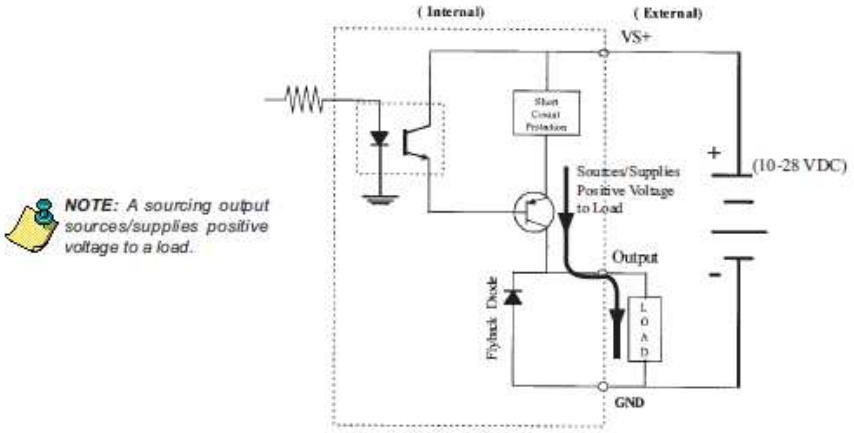

DC OUTPUT [SOURCE]

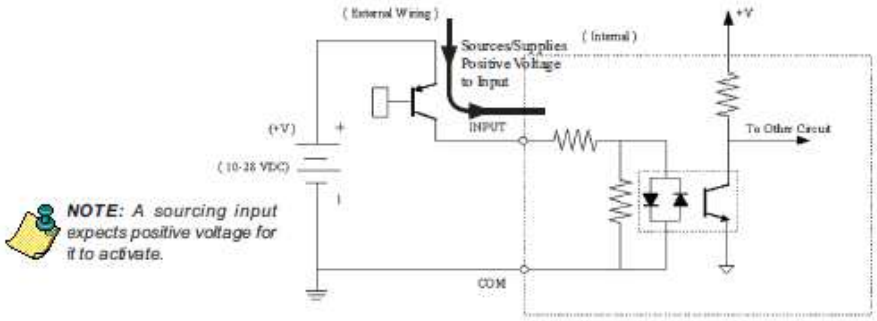

DC INPUT (SOURCE)

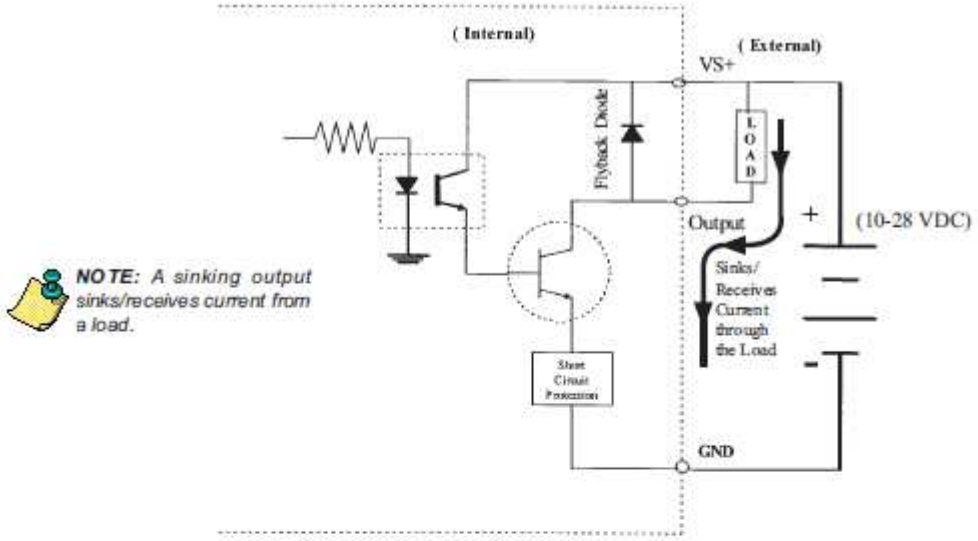

DC OUTPUT [SINK]

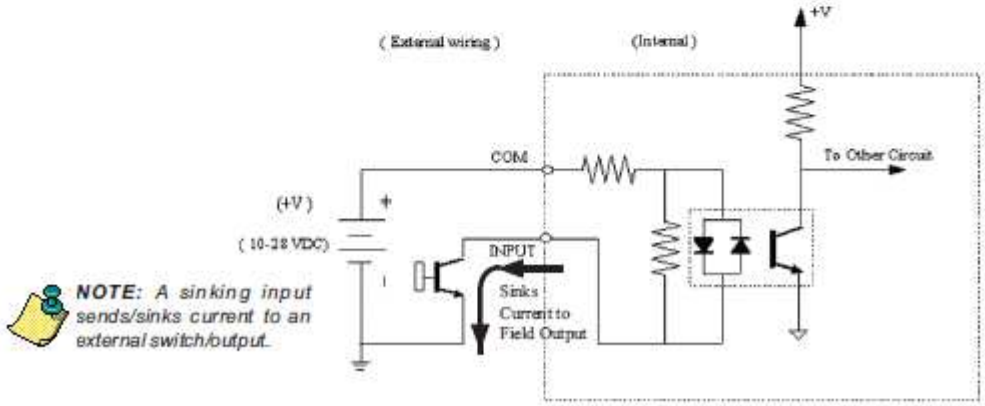

DC INPUT (SINK)

2.5 EZRack PLC Mounting

Mounting Dimensions

The diagrams below provide exact base dimensions. The EZRack PLC base can be panel mounted or on a din-rail. You should use rails that conform to DIN EN standard 50022.

For Panel Mounting, use 4/6 screws with STAR washers to secure the unit to the mounting surface. Dimensions are provided in inches and millimeters, mm appear in brackets.

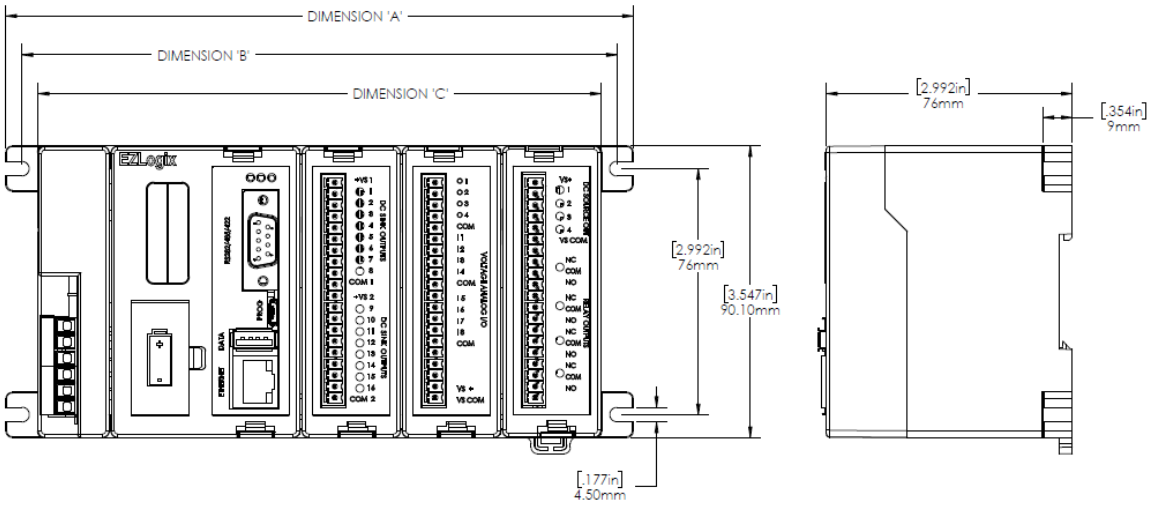

EZRack PLC Size Chart			
	Dimension 'A'	Dimension 'B'	Dimension 'C'
3 MODULE	194.0 [7.64]	184.0 [7.24]	174.0 [6.85]
5 MODULE	256.0 [10.08]	246.0 [9.70]	236.0 [9.29]
7 MODULE	318.0 [12.52]	308.0 [12.13]	298.0 [11.73]

Using Mounting Rails

EZRack PLC bases can be secured to the cabinet using mounting rails. If you mount the base on a rail, you should also consider using end brackets on each side of the base. The end brackets help keep the base from sliding horizontally along the rail. This helps minimize the possibility of accidentally pulling the wiring loose.

If you examine the bottom of the base, you'll notice retaining clips. To secure the base to a DIN rail, place the base onto the rail and gently push up on the retaining clips. The clips lock the base onto the rail. To remove the base, pull down on the retaining clips, slightly lift up the base, and pull it away from the rail.

Hook base on to DIN rail at top and slightly push down base into position

Push the retaining clips upwards to lock the base

Retaining clips clipped to the DIN rail

2.6 EZRack PLC I/O Positioning.

There are no restrictions on plugging in the I/O modules in any slot. Using the EZRack PLC Programming software, you can either manually select which I/O you want to plug in to a particular slot or use the "Auto configure" option in the software to detect the I/O modules which are already plugged in to the EZRack PLC base.

2.7 EZRack PLC I/O Mounting and Wiring.

EZRack PLC IO modules are designed with one thing in mind – modularity! Any EZRack PLC base can be used with any EZRack PLC I/O. All EZRack PLCs are designed to handle any combination of EZRack PLC I/O without any need for power budgeting. Most I/O modules consume only 20 – 40 mA current at 3.3V.

Mounting I/O Modules

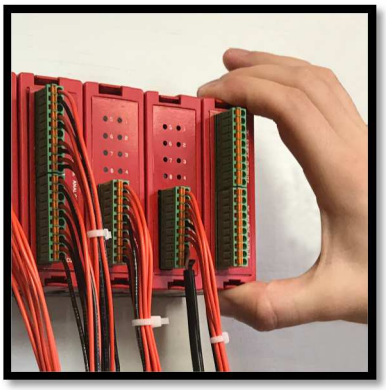

EZRack PLC I/O modules have a snap on design to facilitate easy installation and removal from base slots. The I/O modules have 2 clips, one on the top and the other on the bottom and a connector on it's base, which plugs in to the EZRack PLC base through the guiding slot.

STEP 1: Hold the module between your thumb and index finger so that your finger tips are on the clips.

STEP 2: Insert the module with the use of the guiding slot and push firmly from the top to insert it completely until you hear a click.

Wiring I/O Modules

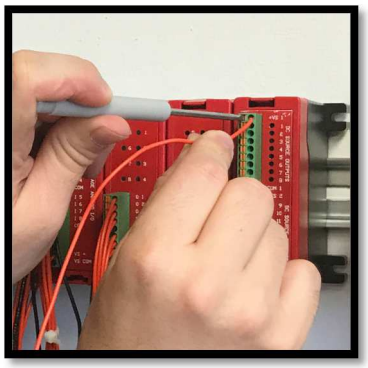

EZRack PLC I/O come standard with spring loaded terminal blocks to provide a secure connection and easy field wiring experience.

Note: If screw type terminal blocks are preferred, these can be purchased separately from the EZAutomation online store.

2.8 EZRack PLC I/O Module Specifications.

EZRPL-IO-16DCI
16 pt. 24 VDC Input Module

Module Specifications	
Number of Inputs	16
Input Voltage Range	11 - 30 VDC
Peak Voltage	40 VDC
Input Current	1.92 mA @ 12 VDC 4.0 mA @ 24 VDC
Maximum Input Current	5 mA @ 28 VDC
Input Impedance	5.6k @ 10-28 VDC
ON Voltage Level	> 10 VDC
OFF Voltage Level	< 2 VDC
Min. ON Current	1.5 mA
Min. OFF Current	0.2 mA
OFF to ON Response	2-4 ms, typical 3 ms
ON to OFF Response	2-4 ms, typical 3 ms
Status Indicators	Red LED for Source Green LED for Sinking
Commons	2 points/4 points Seperate
Base Power Required (5V)	Typical 30mA (all inputs on)
Optical Isolation	2500 Volt
Wires	14 to 24 AWG

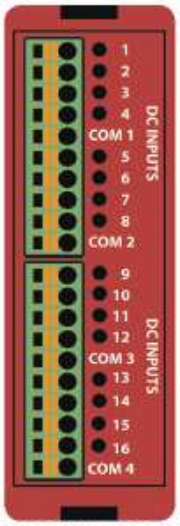

EZLGX-IO-16DCI

Pinout Information			
1	Input(1)	*11*	Input(9)
2	Input(2)	*12*	Input(10)
3	Input(3)	*13*	Input(11)
4	Input(4)	*14*	Input(12)
5	COM-1	*15*	COM-3
6	Input(5)	*16*	Input(13)
7	Input(6)	*17*	Input(14)
8	Input(7)	*18*	Input(15)
9	Input(8)	*19*	Input(16)
10	COM-2	*20*	COM-4

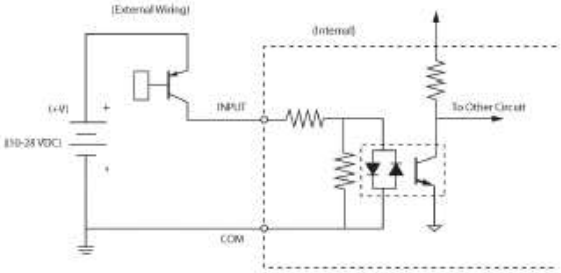

DE INPUT (SOURCE)

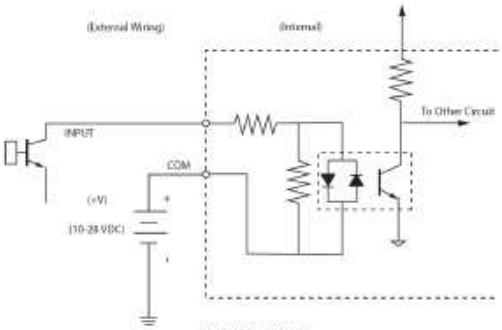

DE INPUT (SINK)

EZRPL-IO-16DCOP

16 pt. 24 VDC Output Module (Sourcing)

Module Specifications	
Number of Outputs	16 sourcing
Output Voltage Range	11-30 VDC
Peak Voltage	50 VDC
Maximum Steady State Output Current	0.5A per output, 1.0A max per module @ 50°C
Maximum Leakage Current	100µA @ 50 VDC @ 50°C
ON Voltage Drop	2 VDC @ 0.5A
Maximum Inrush Current	0.8A for 10ms
OFF to ON Response	< 2µs
ON to OFF Response	<10µs
Status Indicators	Red LED for each output
+V Terminals & Commons	Two V+, 2 Commons Separate
Short Circuit Protection	1 Amp per module, turns off outputs upon short circuit detection
Base Power Required (5V)	80mA, all outputs on
Optical Isolation	2500 Volt
Wires	14 to 24 AWG

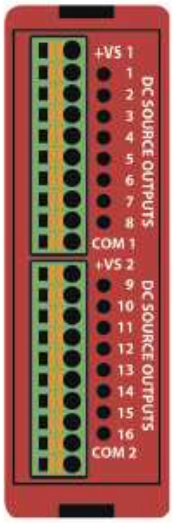

EZLGX-IO-16DCOP

Pinout Information			
1	+VS1	*11*	+VS2
2	Output(1)	*12*	Output(9)
3	Output(2)	*13*	Output(10)
4	Output(3)	*14*	Output(11)
5	Output(4)	*15*	Output(12)
6	Output(5)	*16*	Output(13)
7	Output(6)	*17*	Output(14)
8	Output(7)	*18*	Output(15)
9	Output(8)	*19*	Output(16)
10	COM1	*20*	COM2

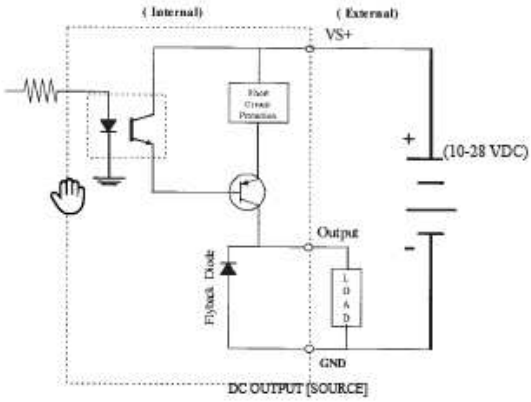

EZRPL-IO-16DCON

16 pt. 24 VDC Output Module (Sinking)

Module Specifications	
Number of Outputs	16 sinking
Peak Voltage	50.0 VDC
Maximum Steady State Output Current	0.4A per output
Maximum Leakage Current	100µA @ 50 VDC @ 50°C
ON Voltage Drop	1.3 VDC @ 0.5A
Maximum Inrush Current	1.0A for 10ms
OFF to ON Response	< 2µs
ON to OFF Response	<10µs
Status Indicators	Red LED for each output
+V Terminals & Commons	Two V", 2 Common
Short Circuit Protection	Turns off outputs upon short circuit detection
Base Power Required (5V)	40mA, all outputs on
Optical Isolation	2500 Volt
Wires	14 to 24 AWG

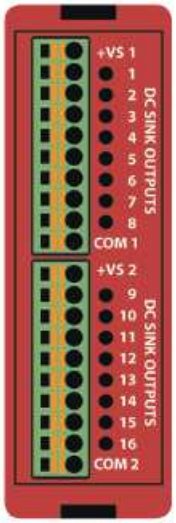

EZLGX-IO-16DCON

Pinout Information			
1	+VS1	*11*	+VS2
2	Output(1)	*12*	Output(9)
3	Output(2)	*13*	Output(10)
4	Output(3)	*14*	Output(11)
5	Output(4)	*15*	Output(12)
6	Output(5)	*16*	Output(13)
7	Output(6)	*17*	Output(14)
8	Output(7)	*18*	Output(15)
9	Output(8)	*19*	Output(16)
10	COM1	*20*	COM2

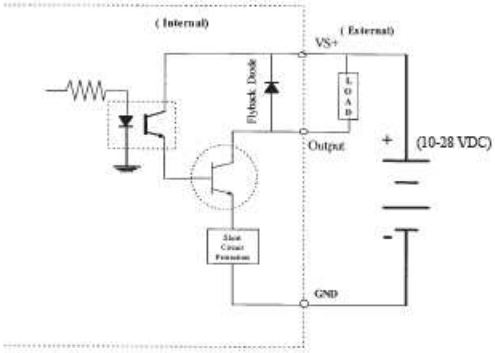

DC OUTPUT [SINK]

EZRPL-IO-8ACI
8 pt. 110 VAC Input Module

Module Specifications	
Number of Inputs	8
Input Voltage Range	70-132 VAC
AC Frequency	47-63 Hz
Peak Voltage	180 Volt
Input Current	0.5mA @ 110 VAC
Maximum Input Current	0.6mA @ 132 VAC
Input Impedance	200K
ON Voltage Level	70 VAC
OFF Voltage Level	40 VAC
OFF to ON Response	< 10ms
ON to OFF Response	< 10ms
Status Indicators	Red LED for each input
Commons	2 Commons
Fuse	No fuse
Base Power Required (5V)	20mA for all 8 on
Optical Isolation	2500 Volt
Wires	14 to 24 AWG

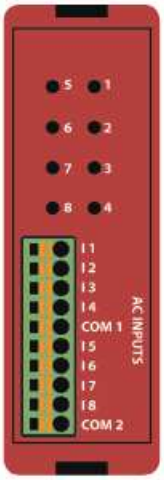

EZLGX-IO-8ACI

Pinout Information	
1	Input(1)
2	Input(2)
3	Input(3)
4	Input(4)
5	AC_Common
6	Input(5)
7	Input(6)
8	Input(7)
9	Input(8)
10	AC_Common

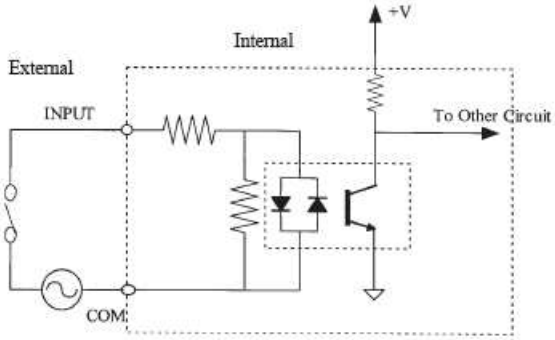

EZRPL-IO-8ACO

8 pt. 110 VAC Output Module

Module Specifications	
Number of Output Points	8
Number of Commons	2
Output Voltage Range	20-132 VAC
Peak Voltage	180 Volt
ON Voltage Drop	1.2 V @ 1A
Maximum Current	1.2 A @ 25°C, 0.8A @ 50°C for each output
Maximum Leakage Current	1mA @ 132 VAC
Maximum Inrush Current	38Amps for 16.6ms
Minimum Load	15mA
OFF to ON Response	max 1/2 cycle
ON to OFF Response	max 1/2 cycle
Base Power Required (5V)	70mA for all 8 on
Optical Isolation	2500 Volt
Wires	14 to 24 AWG

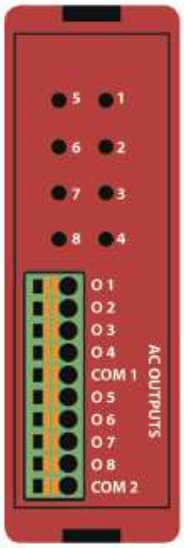

EZLGX-IO-8ACO

Pinout Information	
1	Output(1)
2	Output(2)
3	Output(3)
4	Output(4)
5	AC_Common
6	Output(5)
7	Output(6)
8	Output(7)
9	Output(8)
10	AC_Common

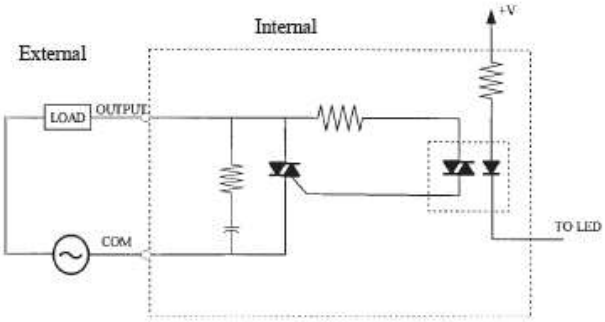

EZRPL-IO-4ACI4ACO

4 pt. 110 VAC Input, 4 pt. 110 VAC Output Module

	Module Specifications	
AC Input Specs	Number of Inputs	4
	Input Voltage Range	70-132 VAC
	AC Frequency	47-63 Hz
	Peak Voltage	180 Volt
	Input Current	0.5mA @ 110 VAC
	Maximum Input Current	0.6mA @ 132 VAC
	Input Impedance	200K
	ON Voltage Level	70 VAC
	OFF Voltage Level	40 VAC
	OFF to ON Response	< 10ms
	ON to OFF Response	< 10ms
	Status Indicators	Green LED for each input
	Commons	1 Common
	Base Power Required (5V)	10mA for all 4 on
	Optical Isolation	2500 Volt
	Wires	24-16 AWG
AC Output Specs	Number of Output Points	4
	Number of Commons	1
	Output Voltage Range	20-132 VAC
	Peak Voltage	180 Volt
	ON Voltage Drop	1.2 V @ 1A
	Maximum Current	1.2 A @ 25°C, 0.8A @ 50°C for each output
	Maximum Leakage Current	1mA @ 132 VAC
	Maximum Inrush Current	38Amps for 16.6ms
	Minimum Load	15mA
	OFF to ON Response	max 1/2 cycle
	ON to OFF Response	max 1/2 cycle
	Fuse	No fuse
	Base Power Required (5V)	35mA for all 4 on
	Optical Isolation	2500 Volt
	Wires	14 to 24 AWG

Pinout Information	
1	Input(1)
2	Input(2)
3	Input(3)
4	Input(4)
5	Input-COM
6	Output(5)
7	Output(6)
8	Output(7)
9	Output(8)
10	Output-COM

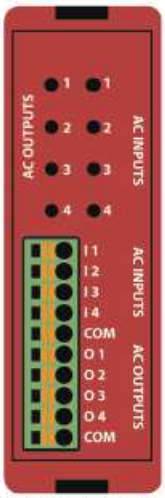

EZLGX-IO-4ACI4ACO

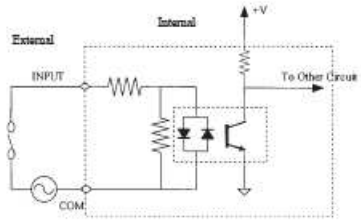

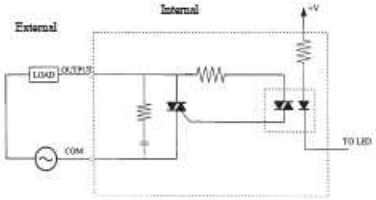

EZRPL-IO-8RLO

8 pt. Relay Output Module (with built-in Electromagnetic Shield)

Module Specifications	
Number of Outputs	8
Output Voltage Range	5-30 VDC or 20-250 VAC
Output Type	8 Form C (SPDT)
Output Terminals Consumed	20
Peak Voltage	30 VDC/380 VAC
AC Frequency	47-63 Hz
Maximum Current (resist.)	5A/point
Maximum Leakage Current	0.5mA @ 130 VAC @ 60Hz
Maximum Switching Current	5A
Electromagnetic Shield	2 pF between contact and shield
Dielectric Strength	1000VAC between contacts, 4000VAC between contacts and coil
OFF to ON Response	≤1ms (typical)
ON to OFF Response	≤1ms (typical)
Status Indicators	Red LEDs
Contacts	8 isolated
Base Power Required (5V)	50mA

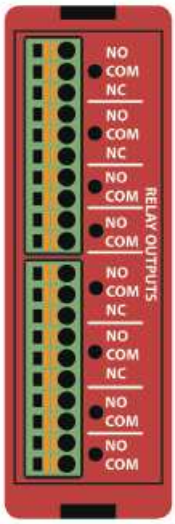

EZLGX-IO-8RLO

Pinout Information			
1	Output(1)_Normally open	*11*	Output(5)_Normally open
2	Output(1)_COM	*12*	Output(5)_COM
3	Output(1)_Normally close	*13*	Output(5)_Normally close
4	Output(2)_Normally open	*14*	Output(6)_Normally open
5	Output(2)_COM	*15*	Output(6)_COM
6	Output(2)_Normally close	*16*	Output(6)_Normally close
7	Output(3)_Normally open	*17*	Output(7)_Normally open
8	Output(3)_COM	*18*	Output(7)_COM
9	Output(4)_Normally open	*19*	Output(8)_Normally open
10	Output(4)_COM	*20*	Output(8)_COM

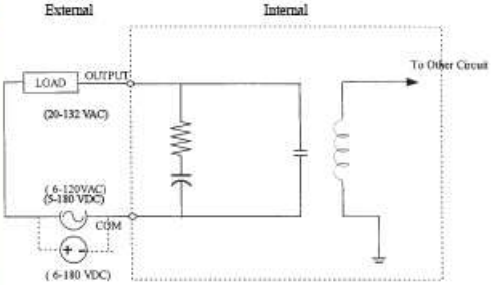

EZRPL-IO-4DCOP4RLO

4 pt. 24 VDC Output (Sourcing), 4 pt. Relay Output Module

	Module Specifications	
DC Output Specs	Number of Outputs	4 sourcing
	Output Voltage Range	20-30 VDC
	Peak Voltage	50.0 VDC
	Maximum Steady State Output Current	0.5A per output, 1.0A max per module @ 50°C
	Maximum Leakage Current	100µA @ 50 VDC @ 50°C
	ON Voltage Drop	2 VDC @ 0.5A
	Maximum Inrush Current	0.8A for 10ms
	OFF to ON Response	< 2µs
	ON to OFF Response	<10µs
	Status Indicators	Red LED for each output
	+V Terminals & Commons	One + One
	Short Circuit Protection	1 Amp per module, turns off outputs upon short circuit detection
	Base Power Required (5V)	40mA, all outputs on
	Optical Isolation	2500 Volt
	Wires	14 to 24 AWG
	Optical Isolation	2500 Volt
Relay Output Specs	Number of Outputs	4 Isolated
	Output Voltage Range	10A @ 277 VAC or 30VDC
	Output Type	4 Form C (SPDT)
	Output Terminals Consumed	12
	Peak Voltage	30 VDC/3800 VAC
	AC Frequency	47-63 Hz
	Maximum Current (resist.)	5A/point
	Maximum Leakage Current	0.5mA @ 130 VAC @ 60Hz
	Maximum Switching Current	15A
	Electromagnetic Shield	2 pF between contact and shield
	Dielectric Strength	750 VAC between contacts, 1500 VAC between contacts & coil
	OFF to ON Response	Max 10ms
	ON to OFF Response	Max 5ms
	Status Indicators	Red LEDs
	Base Power Required (5V)	50mA
	Wires	14 to 24 AWG

Pinout Information			
1	+24V	11	NC-2
2	Output(1)	12	COM-2
3	Output(2)	13	NO-2
4	Output(3)	14	NC-3
5	Output(4)	15	COM-3
6	24V-COM	16	NO-3
7	Not Connected	17	NC-4
8	NC-1	18	COM-4
9	COM-1	19	NO-4
10	NO-1	20	Not Connected

Note: NO-Normally Open, NC-Normally Closed

EZLGX-IO-4DCOP4RLO

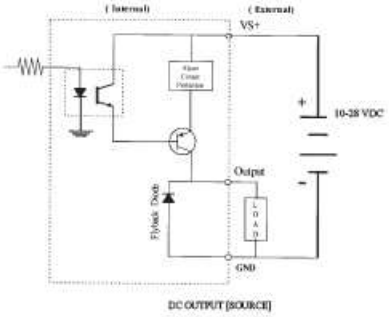

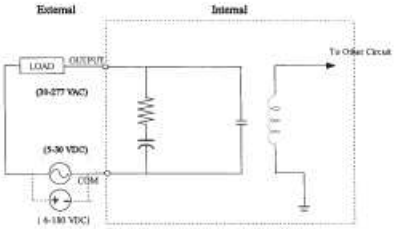

EZRPL-IO-8ANI4ANOV

8 pt. Analog Input, 4 pt. Analog Output Module (Voltage)

	Module Specifications	
Analog Voltage Input Specs	Number of Channels	8 single ended (2 commons)
	Input Range	0-10V
	Resolution	12 bit (1-4096)
	Step Response	200µs to 95% of FS
	Crosstalk	1/2 count max, -80db
	Input Impedance	>20KΩ
	Absolute Max Ratings	± 15V
	Converter Type	successive approximation
	Linearity Error (end to end)	± 2 count
	Input Stability	± 2 count
	Gain Error	± 2 counts
	Offset Calibration Error	± 5 counts
	Max Inaccuracy	± 0.2% at 25°C, ± 0.4% at 0-60°C
	Accuracy vs. Temperature	± 50 ppm/°C typical
Analog Voltage Output Specs	Number of Channels	4 single ended (1 common)
	Output Range	0-10 VDC
	Resolution	12 bits (1 in 4096)
	Conversion Setting Time	100 µs for FS
	Crosstalk	1/2 count max, -80db
	Peak Output Voltage	± 18 VDC
	Offset Error	± 0.15% of range
	Gain Error	± 0.3% of range
	Linearity Error (end to end)	± 1 count
	Output Stability	± 2 counts
	Load Impedance	2k Ω min.
	Load Capacitance	.01 microF max
	Accuracy vs. Temperature	± 50 ppm/C typical

Pinout Information			
1	Output(1)	11	Input(5)
2	Output(2)	12	Input(6)
3	Output(3)	13	Input(7)
4	Output(4)	14	Input(8)
5	COM	15	COM
6	Input(1)	16	Not Connected
7	Input(2)	17	Not Connected
8	Input(3)	18	Not Connected
9	Input(4)	19	+VS
10	COM	20	VS-COM

EZLGX-IO-8ANI4ANOV

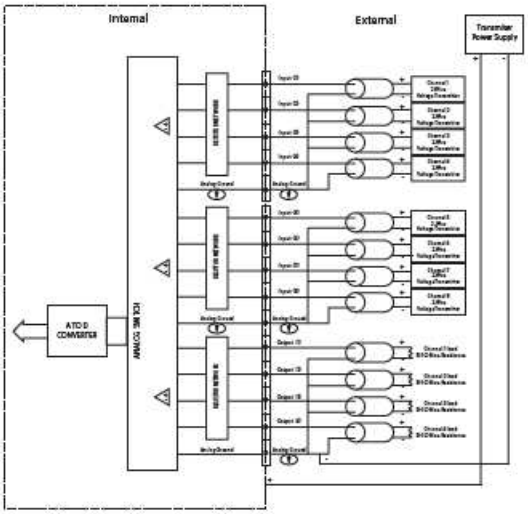

EZRPL-IO-8ANI4ANOC

8 pt. Analog Input, 4 pt. Analog Output Module (Current)

	Module Specifications	
Analog Current Input Specs	Number of Channels	8 Single Ended
	Input Range	4-20 mA
	Resolution	12 bit (1-4096)
	Step Response	1ms for 95% FS
	Crosstalk	1/2 count max, -80db
	Input Impedance	62.5Ω ± 0.1%
	Absolute Max Ratings	-30mA to 30mA
	Converter Type	Successive Approximation
	Linearity Error (end to end)	± 2 counts
	Input Stability	± 1 count
	Full-scale Calibration Error	± 10 counts @ 20mA
	Offset Calibration Error	± 5 counts
	Max Inaccuracy	± 0.3% @ 25°C, ± 0.6% @ 60°C
	Accuracy vs. Temperature	± 50 ppm/°C typical
	Recommended Fuse	.032 Amp, series 217 fast acting
Analog Current Output Specs	Number of Channels	4 single ended
	Output Range	4-20mA
	Output Type	Current Sourcing
	Resolution	12 bit (1-4096)
	Max. Loop Voltage	6 VDC
	Load/loop	0-300Ω
	Linearity Error (end to end)	± 2 counts
	Conversion Setting Time	100µs for FS
	Full-scale Calibration Error	± 12 counts
	Offset Calibration Error	± 6 counts
	Max. Full-scale Inaccuracy (all errors included)	± 0.3%
	Wires	14 to 24 AWG

Pinout Information			
1	Output(1)	11	Input(5)
2	Output(2)	12	Input(6)
3	Output(3)	13	Input(7)
4	Output(4)	14	Input(8)
5	COM	15	COM
6	Input(1)	16	Not Connected
7	Input(2)	17	Not Connected
8	Input(3)	18	Not Connected
9	Input(4)	19	+VS
10	COM	20	VS-COM

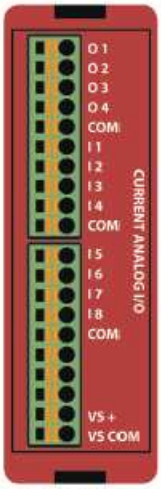

EZLGX-IO-8ANI4ANOC

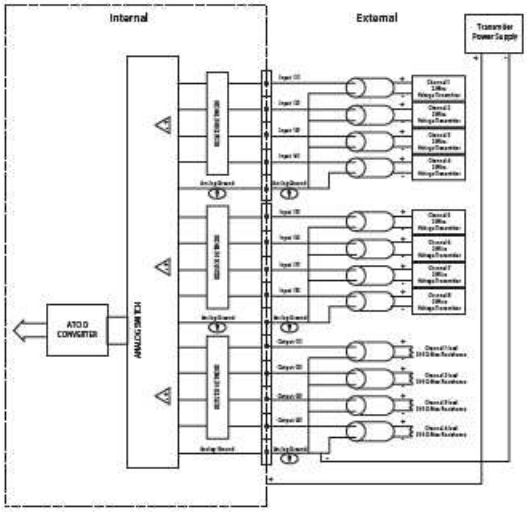

EZRPL-IO-4RTD

4 pt. Resistance Temperature Detector

Pinout Information		
1	CHAN1 +	CHAN3 +
2	CHAN1 -	CHAN3 -
3	COM-1	COM-3
4		
5	CHAN2 +	CHAN4 +
6	CHAN2 -	CHAN4 -
7	COM-2	COM-4
8		
9		VS +
10		VS - COM

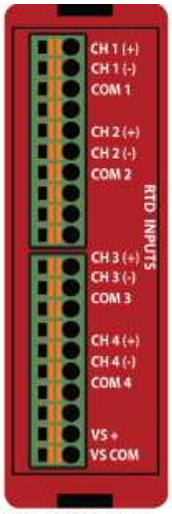

EZLGX-IO-RTD

RTD Input Specifications	
Number of Channels	4
Common Mode Range	0-3.3 VDC
Coverter Type	12-bit
Update Rate	All Channels per scan
Input Words Required	4 IR Words
Temperature Drift	50 ppm / °C (max)
Maximum Inaccuracy	+ / - 3 °C
RTD Excitation Current	500 uA
Operating Temperature	0 °C to 60 °C
Storage Temperature	-20 °C to 70 °C
Relative Humidity	5 to 95 %
Terminal Block	300 Volt/8 Amp/ 16 AWG UL Rating
Optical Isolation	2500 Volt

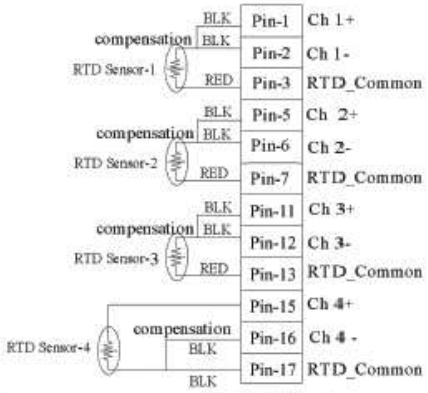

RTD Input Ranges			
RTD Input Ranges	Temperature Coefficient of Resistance (TCR) (Ω/Ω°C)	Temperature Ranges	Resolution
Pt100	0.00385	-200 °C to + 850 °C	0.29
120 Ni	0.00672	-80 °C to 260 °C	0.22
10 Cu	0.00427	-200 °C to 260 °C	2.64

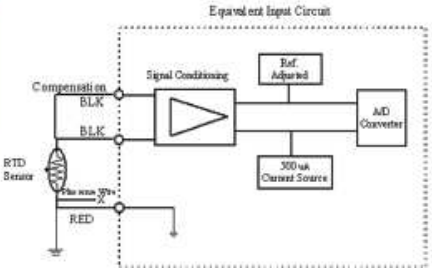

EZRPL-IO-8ANI4ANOV-16BIT

16-Bit, 8 pt. Analog In, 4 pt. Analog Out

	Module Specifications	
Analog Voltage Input Specs	Number of Channels	8 Single ended
	Input Range	0-10 VDC
	Resolution	16-bit (1-65535)
	Step Response	15µs to 95% of FS
	Crosstalk	1/2 count max, -120dB
	Input Impedance	>10MΩ
	Absolute Max Ratings	±12V ±100mA
	Converter Type	successive approximation
	Linearity Error (end to end)	±2 LSB
	Input Stability	
	Gain Error	±1 LSB
	Offset Calibration Error	±5 LSB
	Max Inaccuracy	0.1% @ 25° C
	Accuracy vs. Temperature	± 1 ppm/°C
Analog Voltage Output Specs	Number of Channels	4 Single ended
	Output Range	0-10 VDC
	Resolution	16-bit (1-65535)
	Conversion Setting Time	10µs to 95% of FS
	Crosstalk	1/2 count max, -100dB
	Peak Output Voltage	±18 VDC
	Offset Error	±0.15% of range
	Gain Error	±0.15% of range
	Linearity Error (end to end)	±2 LSB
	Output Stability	±2 count
	Load Impedance	2KΩ min.
	Load Capacitance	0.01µF max.
	Accuracy vs. Temperature	5ppm/°C

Pinout Information			
1	Output(1)	11	Input(5)
2	Output(2)	12	Input(6)
3	Output(3)	13	Input(7)
4	Output(4)	14	Input(8)
5	COM	15	COM
6	Input(1)	16	Not Connected
7	Input(2)	17	Not Connected
8	Input(3)	18	Not Connected
9	Input(4)	19	+VS
10	COM	20	VS-COM

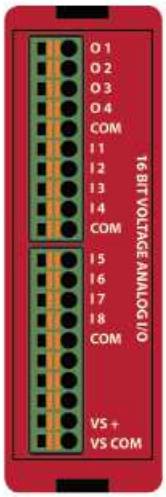

EZRPL-IO-8ANI4ANOV-16BIT

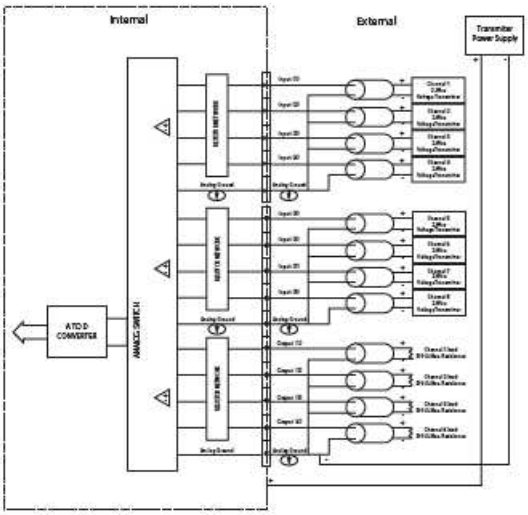

EZRPL-IO-4THIE

4 pt. Thermocouple Input Module

Module Specifications	
Number of Channels	4, differential
Common Mode Range	-1.5 VDC to +4.0 VDC
Common Mode Rejection	100dB min. @ VDC 50/60Hz
Input Impedance	5MΩ
Absolute Maximum Ratings	Fault-protected inputs to ±50 VDC
Accuracy vs. Temperature	± 15ppm/°C max. 0-1.25V ±35 ppm/°C max. (including max. offset change)
PLC Update Rate	4 channels per scan
Base Power Required	10mA @ 3.3 VDC supplied by base
Operating Temperature	-4° to 140°F (-20° to 60°C)
Storage Temperature	-4° to 158°F (-20° to 70°C)
Relative Humidity	5 to 95% (non-condensing)
Environmental Air	No corrosive gases permitted
Vibration	MIL STD 810C 514.2
Shock	MIL STD 810C 516.2
Noise Immunity	NEMA ICS3-304

Pinout Information			
1	Input 1+	*11*	Input 4+
2	Input 1-	*12*	Input 4-
3	Not Connected	*13*	Not Connected
4	Input 2+	*14*	CJC V+
5	Input 2-	*15*	CJC VOut
6	Not Connected	*16*	CJC Ground
7	Input 3+	*17*	
8	Input 3-	*18*	
9	Not Connected	*19*	VS+
10	Not Connected	*20*	VS Common

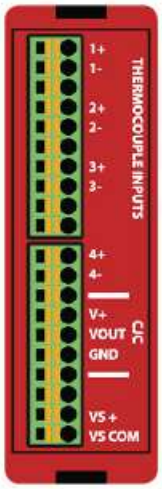

EZRPL-IO-4THIE

Thermocouple Specifications	
Input Ranges in C	Type J -210 to 1200°C Type K -200 to 1372°C Type S -50 to 1768°C Type T -200 to 400°C Type E -200 to 1000°C Type R -50 to 1768°C Type B 250 to 1820°C Type N -200 to 1300°C
Display Resolution	Type J,K,T, E,B,N ± 0.1°C; Type S,R ± 1°C
Resolution	16 Bit (1 in 65535)
Cold Junction Compensation	Automatic
Conversion Time	1ms per channel
Warm-Up Time	30 minutes typically ± 1°C repeatability
Linearity Error (End to End)	± 1°C max. ± 0.5°C typical
Maximum Inaccuracy	± 2°C (excluding thermocouple error)

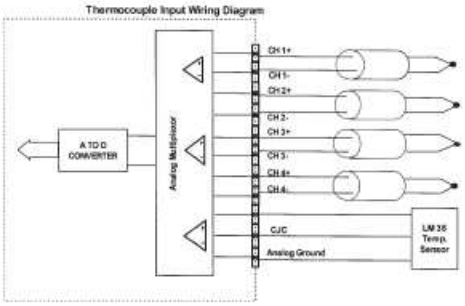

EZRPL-IO-HSCNT

High Speed Counter Inputs with Fast DC/PLS Outputs

High Speed 24 bit Counter Modules with PLS outputs that accept quadrature encoder inputs. The PLS outputs compare the counter value to two on/off presets and turn on outputs within 100µs of position change. Presets can be loaded into the counter modules from EZRack PLC. All inputs and outputs are optically isolated.

The counters have various preset/reset and inhibit modes as shown on the following page.

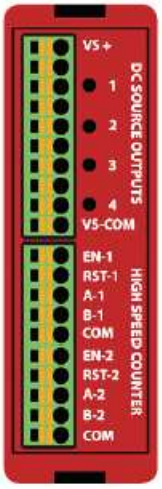

EZRPL-IO-HSCNT

Configuring your High Speed Counter Module is EZier than Ever!

1 In EZRack PLC's I/O configuration specify the range of registers to be used for input and output.

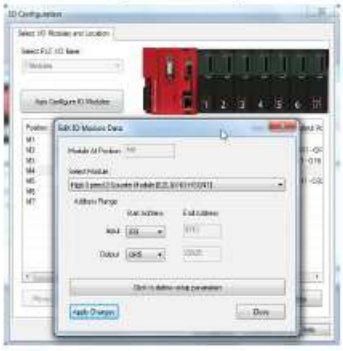

Pinout Information			
1	VS+	11	Counter EN-1
2		12	Counter RST-1
3	Output 1	13	Counter A-1
4		14	Counter B-1
5	Output 2	15	Common
6		16	Counter EN-2
7	Output 3	17	Counter RST-2
8		18	Counter A-2
9	Output 4	19	Counter B-2
10	VS Common	20	Common

2 Configure pulse, direction, quadrature counting, set points, preset values and preset mode

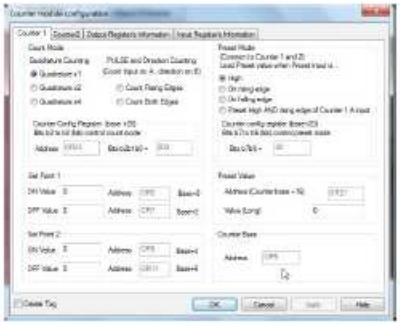

3 Detailed information for input and output registers

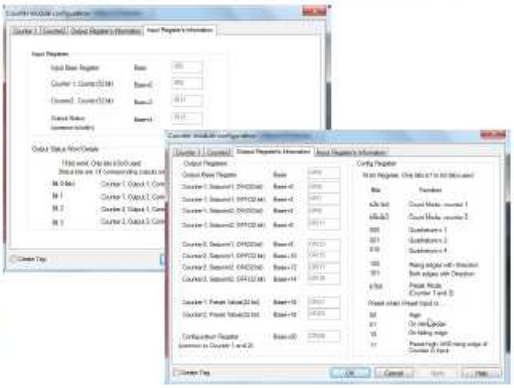

EZRPL-IO-HSCNT
High Speed Counter Inputs with Fast DC/PLS Outputs

Module Specifications	
Feature	*EZRPL-IO-HSCNT*
Module Type	Intelligent High Speed **Dual** Counter Module
Maximum Input Frequency	100KHz after 1X, 2X or 4X Multiplication
Minimum Pulse Width	5 µs
Resource Options	1X, 2X, or 4X Quadrature, Up or Down Counter, Reset
Counter Range	16 million (24 bits)
Preset Modes	1. This mode will preset the counter to the preset value while preset is held high. While the preset signal is high, no new count signals will be counted. 2. This mode will create an interrupt on the rising edge of the reset signal to set the counter to the preset value. 3. This mode will create an interrupt on the falling edge of the preset signal to set the counter to the preset value. 4. This mode will create a preset pulse every time that there is a rising edge of signal A and the preset signal is high.
Reset Modes/Input	Same as Preset except the reset input sets the counter value to zero
Inhibit Input	Inhibits the counter from counting when high

General Specifications	
Optical Isolation	2500 Volt
Wires	1 of 14 AWG, 2 of 18 AWG, 4 of 22 AWG
Operating Environment	-20-60°C, Humidity non-condensing 5-95%

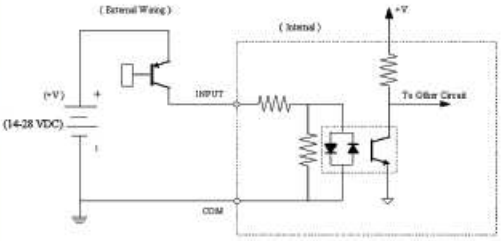

DC INPUT (Source)
for Control Signals

High Speed Output Specifications	
Feature	*EZRPL-IO-HSCNT (dual counter)*
Number of Outputs	4 High Speed PLS / DC Source outputs
Response Time	100µs
PLS Setpoints	1 on/off pair for each output
Peak Voltage	50.0 VDC
Maximum Steady State Output Current	0.5A per output, 1.0A max per module @ 50°C
Maximum Leakage Current	100µA @ 50 VDC @ 50°C
ON Voltage Drop	2 VDC @ 0.5A
Maximum Inrush Current	0.8A for 10ms
OFF to ON Response	< 2µs
ON to OFF Response	<10µs
Status Indicators	Red LED for each output
+V Terminals & Commons	One V+, 1 Common
Short Circuit Protection	1 Amp per module, turns off outputs upon short circuit detection
Optical Isolation	2500 Volt

Counter Input Specifications	
Feature	*EZRPL-IO-HSCNT (dual counter)*
Number of Inputs	4 per High Speed Channel Inputs (A, B, EN, RST)
Input Voltage Range	14-28 VDC
Peak Voltage	40 VDC
Input Current	2.5 mA @ 14 VDC 5.0 mA @ 28 VDC
Maximum Input Current	5 mA @ 28 VDC
Input Impedance	5.6KΩ min. @ 14-28 VDC
ON Voltage Level	> 14 VDC
OFF Voltage Level	< 2 VDC
Min. ON Current	2.5 mA
Min. OFF Current	0.2 mA
OFF to ON Response	< 2µs
ON to OFF Response	< 3µs
Commons	1 per High Speed Counter Input

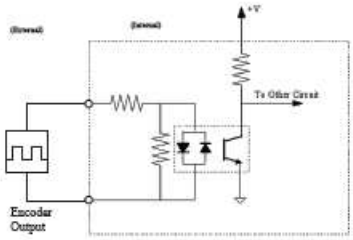

DC INPUT (Source)
for Control Signals

Output Wiring

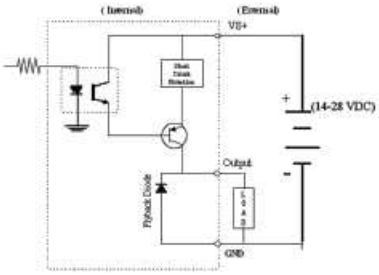

EZRPL-IO-6DI4DO-2ANI2ANOC
Combo Discrete and Analog Current Module

The combo discrete and analog modules are ideal for small machine applications requiring less I/O. They give you the cost benefit you normally find it in fixed I/O PLCs, but also provide flexibility & expandibility for your I/O needs as additional I/O modules can be added to the EZRack PLC.

Pinout Information			
1	Digital Out - 1	11	Digital In - 6
2	Digital Out - 2	12	Common_In
3	Digital Out - 3	13	Analog Out - 1
4	Digital Out - 4	14	Analog Out - 2
5	Common	15	Common
6	Digital In - 1	16	Analog In - 1
7	Digital In - 2	17	Analog In - 2
8	Digital In - 3	18	Common
9	Digital In - 4	19	VS+
10	Digital In - 5	20	VS Common

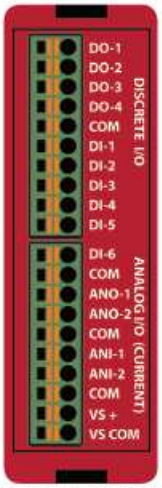

EZRPL-IO-6DI4DO-2ANI2ANOC

Digital Output Module Specifications	
Number of Outputs	4 sourcing
Output Voltage Range	11-30 VDC
Peak Voltage	50 VDC
Maximum Steady State Output Current	0.5A per output, 1.0A max per module @ 50°C
Maximum Leakage Current	100µA @ 50 VDC @ 50°C
ON Voltage Drop	2 VDC @ 0.5A
Maximum Inrush Current	0.8A for 10ms
OFF to ON Response	< 2µs
ON to OFF Response	<10µs
Status Indicators	Red LED for each output
+V Terminals & Commons	One V+, 3 Commons Separate
Short Circuit Protection	1 Amp per module, turns off outputs upon short circuit detection
Base Power Required (5V)	80mA, all outputs on
Optical Isolation	2500 Volt
Wires	14 to 24 AWG

Digital Input Module Specifications	
Number of Inputs	6
Input Voltage Range	11 - 30 VDC
Peak Voltage	40 VDC
Input Current	1.92 mA @ 12 VDC 4.0 mA @ 24 VDC
Maximum Input Current	5 mA @ 28 VDC
Input Impedance	5.6k @ 10-28 VDC
ON Voltage Level	> 10 VDC
OFF Voltage Level	< 2 VDC
Min. ON Current	1.5 mA
Min. OFF Current	0.2 mA
OFF to ON Response	2-4 ms, typical 3 ms
ON to OFF Response	2-4 ms, typical 3 ms
Status Indicators	Red LED for Source Green LED for Sinking
Commons	1 point (Common_In)
Base Power Required (5V)	Typical 30mA (all inputs on)
Optical Isolation	2500 Volt
Wires	14 to 24 AWG

EZRPL-IO-6DI4DO-2ANI2ANOC
Combo Discrete and Analog Current Module

Analog Specifications		
Analog Current Input Specs	Number of Channels	2 Single Ended
	Input Range	4-20 mA
	Resolution	12 bit (1-4096)
	Step Response	1ms for 95% FS
	Crosstalk	1/2 count max, -80db
	Input Impedance	62.5Ω ± 0.1%
	Absolute Max Ratings	-30mA to 30mA
	Converter Type	Successive Approximation
	Linearity Error (end to end)	± 2 counts
	Input Stability	± 1 count
	Full-scale Calibration Error	± 10 counts @ 20mA
	Offset Calibration Error	± 5 counts
	Max Inaccuracy	± 0.3% @ 25°C ± 0.6% @ 60°C
	Accuracy vs. Temperature	± 50 ppm/°C typical
	Recommended Fuse	.032 Amp, series 217 fast acting
Analog Current Output Specs	Number of Channels	2 single ended
	Output Range	4-20mA
	Output Type	Current Sourcing
	Resolution	12 bit (1-4096)
	Max. Loop Voltage	6 VDC
	Load/loop	0-300Ω
	Linearity Error (end to end)	± 2 counts
	Conversion Setting Time	100µs for FS
	Full-scale Calibration Error	± 12 counts
	Offset Calibration Error	± 6 counts
	Max. Full-scale Inaccuracy (all errors included)	± 0.3%
	Wires	14 to 24 AWG

Module Specifications	
Operating Temperature	-20 °C to 60 °C
Storage Temperature	-20 °C to 70 °C
Relative Humidity	5 to 95 %
Removable Terminal Block	300 Volt/8 Amp/ 14 AWG UL Rating
Vibration	MIL STD 810C 514.2
Shock	MIL STD 810C 516.2
Noise Immunity	NEMA ICS3-304

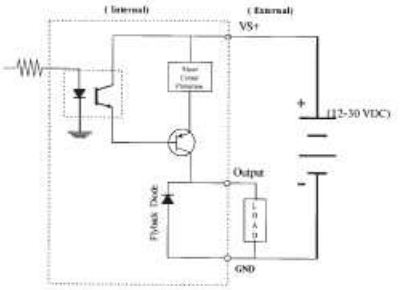

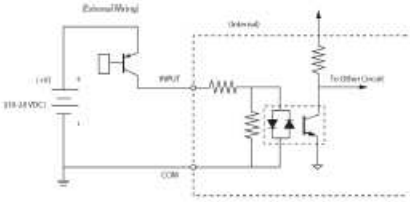

DI INPUT (SOURCE)

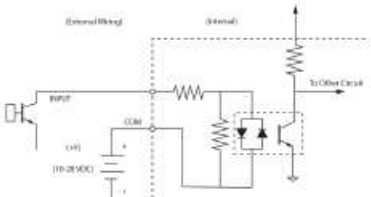

DI INPUT (SINK)

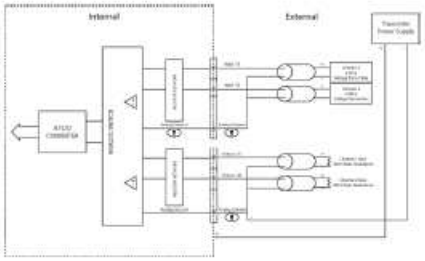

EZRPL-IO-8DCOP-HC

8 pt. 24VDC Output Sourcing (High Current, 3A/pt.)

Module Specifications	
Number of Outputs	8 sourcing
Output Voltage Range	11-30 VDC
Peak Voltage	50 VDC
Maximum Steady State Output Current	3.0A per output, 24.0A max per module @ 50*C
Maximum Leakage Current	100µA @ 50 VDC @ 50*C
ON Voltage Drop	2 VDC @ 0.5A
Maximum Inrush Current	0.8A for 10ms
OFF to ON Response	< 2µs
ON to OFF Response	<10µs
Status Indicators	Red LED for each output
+V Terminals & Commons	Two V+, 2 Commons Separate
Short Circuit Protection	24 Amps per module, turns off outputs upon short circuit detection
Base Power Required (5V)	80mA, all outputs on
Optical Isolation	2500 Volt
Wires	14 to 24 AWG

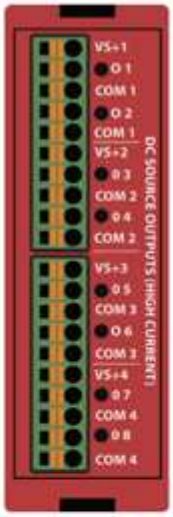

EZRPL-IO-8DCOP-HC

Pinout Information			
1	VS+1	11	VS+3
2	Output 1	12	Output 5
3	COM 1	13	COM 3
4	Output 2	14	Output 6
5	COM 1	15	COM 3
6	VS+2	16	VS+4
7	Output 3	17	Output 7
8	COM 2	18	COM 4
9	Output 4	19	Output 8
10	COM 2	20	COM 4

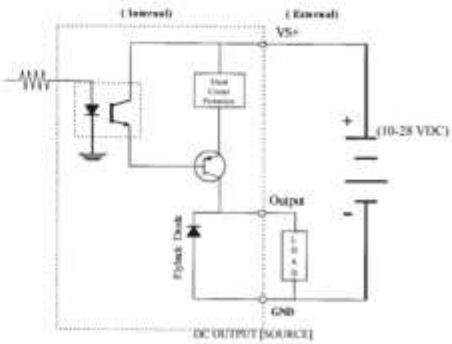

EZAutomation

3

Chapter 3: Specifications, CPU Operation, PLC Modes ad Memory Mapping

In this Chapter…

3.1 EZRack PLC Bases, CPU and I/O Module part numbers … 3-50
3.2 EZRack PLC Accessories..... 3-51
3.3 EZRack PLC CPU Specifications…..... 3-52
3.4 CPU Overview… 3-53
3.5 CPU Status Indication LEDs … 3-54
3.6 Battery Backup…..... 3-56
3.7 CPU Operation Sequence…..... 3-57
3.8 I/O Response Time… 3-58
3.9 Memory Mapping 3-61
3.9a Memory Map Table 3-64
3.9b System Discretes 3-64
3.9c System Registers 3-65

3.1 EZRack PLC Bases, CPU and I/O Modules part numbers

EZRack PLC Base	
24V DC Powered Base	
EZRPL-DC-03B	24V DC Powered, 3 Slot Base.
EZRPL-DC-05B	24V DC Powered, 5 Slot Base.
EZRPL-DC-07B	24V DC Powered, 7 Slot Base.
110/220 VAC Powered Base	
EZRPL-AC-03B	110 / 220 V AC Powered, 3 Slot Base.
EZRPL-AC-05B	110 / 220 V AC Powered, 5 Slot Base.
EZRPL-AC-07B	110 / 220 V AC Powered, 7 Slot Base.
EZRack PLC CPU	
EZRPL-CPU-1UE	EZRack PLC CPU with 1 Serial, 1 Ethernet, 1 USB, 1 Micro USB Port
EZRPL-CPU-2UE	EZRack PLC CPU with 2 Serial, 1 Ethernet, 1 USB, 1 Micro USB Port
EZRack PLC I/O Modules	
DC Modules	
EZRPL-IO-16DCI	16 pt. 24V DC Input Module
EZRPL-IO-16DCOP	16 pt. 24V DC Output Module (Sourcing)
EZRPL-IO-16DCON	16 pt. 24V DC Output Module (Sinking)
AC Modules	
EZRPL-IO-8ACI	8 pt. 110V AC Input Module
EZRPL-IO-8ACO	8 pt. 110V AC Output Module
EZRPL-IO-4ACI4ACO	4 pt. 110V AC Input, 4 pt. 110V AC Output Module
Analog Modules	
EZRPL-IO-8ANI4ANOV	8 pt. Analog Input, 4 pt. Analog Output (Voltage) 12 Bit
EZRPL-IO-8ANI4ANOC	8 pt. Analog Input, 4 pt. Analog Output (Current) 12 Bit
EZRPL-IO-4RTD	4 pt. RTD Temperature Input Module
EZRPL-IO-8ANI4ANOV-16BIT	8 pt. Analog Input, 4 pt. Analog Output (Voltage) 16 Bit
EZRPL-IO-4THIE	4 pt. Thermocouple Input Module
Relay Modules	
EZRPL-IO-8RLO	8 pt. Relay Output Module
EZRPL-IO-4DCOP4RLO	4 pt. 24V DC Output (Sourcing), 4 pt. Relay Output

Specialty Modules	
EZRPL-IO-HSNCT	High Speed Counter Input with Fast DC/PLS Outputs
EZRPL-IO-6DI4DO-2ANI2ANOC	6 pt. 24V DC In, 4 pt. DC Out, 2 Analog In and 2 Analog Out
EZRPL-IO-8DCOP-HC	8 pt. 24V DC Source Output, High Current. 3A/pt.

3.2 EZRack PLC Accessories

EZRack PLC Accessories	
EZ-PGMCBL	RS 232C, EZRack PLC Programming Cable
EZ-PGMCBL-RPL	Micro USB, EZRack PLC Programming Cable
EZRACK PLC-EDITOR	EZRack PLC Programming Software (USB)
EZPPS-90W	24V DC Power Supply
EZRPL-BAT	3.6V, 1/2 AA EZRack PLC Battery
EZRPL-TERM-SL-10	10 Pin Removable I/O, Spring Loaded Terminal Block
EZRPL-TERM-ST-10	10 Pin Removable I/O, Screw Type Terminal Block

EZRack PLC Base and Power Supply Selection Guide and Specifications.

EZRack PLC Base & Power Supply Specifications						
Specifications	AC Powered Bases			DC Powered Bases		
Part Numbers	EZRPL-AC-03B	EZRPL-AC-05B	EZRPL-AC-07B	EZRPL-DC-03B	EZRPL-DC-05B	EZRPL-DC-07B
Input Voltage Range	110 / 220 VAC (90-265VAC)			24VDC (20-28VDC)		
Number of Slots	3 Slot Base	5 Slot Base	7 Slot Base	3 Slot Base	5 Slot Base	7 Slot Base
Auxiliary 24 VDC Output	800mA					
Maximum Inrush Current	1 Amp					
Maximum Power Consumption	10 Watts					
Opearating Temp.	-20 to 60°C (-4 to 140° F)					
Storage Temp.	-40 to 85°C (-40 to 185° F)					
Price	*$99*	*$119*	*$139*	*$119*	*$129*	*$149*

3.3 EZRack PLC CPU Selection Guide and Specifications

EZRPL-CPU-1UE

EZRPL-CPU-2UE

EZRack PLC CPU Specifications			
Feature		EZRPL-CPU-1UE $149	EZRPL-CPU-2UE $199
Total Memory (bytes)		37.02 MB	
Ladder Memory (instruction words)		500,000 instruction words	
Data Memory	*Internal Bits*	1024	
	Internal Registers	16384	
Current Consumption		400mA	
Boolean execution/K		2.4 ms	
Interrupt Instruction Response Time		50 µs	
Programming Software for Windows		Free EZRack PLC Designer Pro	
Built-In communications ports		RS232/422/485 Ethernet 10/100Mbps	2 RS232/422/485 Ethernet 10/100Mbps
Program Memory		Flash	
Data Logging		Yes, USB (Up to 64 Gb)	
USB Programming		Yes	
PLC Simulation		Yes	
IIoT Ready		Yes, MQTT Protocol	
LED Indicators		Input Power, Program Run, Low Battery, USB Logging	
I/O Modules Supported		AC, DC, Analog, Relays with Removable Terminal Block & LED Indicator per I/O	
Operating Temperature		-20 to 60°C (-4 to 140° F)	
Storage Temperature		-40 to 85°C (-40 to 185° F)	
Max Number of Ethernet slaves per Channel		4	
Discrete I/O Module Point Density		8/12/16	
Slots per Base		3/5/7	
Number of instructions available		>70	
Control relays		131,072	
Timers		256 (default)	
Counters		256 (default)	
Immediate I/O		Yes	
Subroutines		Functions Block, up to memory limit	
Drum Sequencer		Yes, up to memory limit	
Loops		FOR/NEXT/JUMP loops	
Math		Yes, Advanced Function Blocks: Integer, Floating Point, Trignometric, Logical, Bitwise	
ASCII		Yes, Send/Receive	
PID Loop Control, Built In		Yes, Auto-tuned	
Time of Day Clock/Calendar		Yes RTC	
Run Time Edits		Yes	
Supports True Force		Yes	
Internal Diagnostics		Yes	
Password security		Yes	
Battery backup		Yes (Battery included)	
Shock		30g (IEC 60068-2-27)	
Vibration		2g @ 10...500 Hz (IEC 60068-2-6)	
Electrical Noise		Nema ICS 2-230 Showering arc; ANSI C37.90a SWC; Level C Chattering Relay Test	
ESD Immunity		6kV contact discharge (IEC 61000-4-2)	
Agency Approvals		CE, UL, cUL	

3.4 CPU Overview

The EZRack PLC CPU is one of the most crucial and important components of the EZRack PLC. Almost all PLC operations are carried out in the CPU, so it is very important to understand it's capabilities. This section will provide you with all the information regarding the EZRack PLC CPU and its communication specifications.

EZRPL-CPU-1UE

EZRPL-CPU-2UE

EZRack PLC has two different CPU options. It comes with either 1 or 2 serial ports built on it.

Note: Both CPU models come equipped with a built in Ethernet port, Micro USB Port and Standard USP Port for various functions including programming, data logging and communication to 3rd party devices.

ALL EZRack PLC CPUs offer very robust processing power with a rich set of Instructions, Advanced Function Blocks, Local Data Logging, IIoT / Industry 4.0 ready and with a 2.4 ms scan time.

- Standard RS232/422/485 communication port.
- 10/100 Base-T Ethernet for Programming and PLC Communication.
- USB port for local data logging.
- Micro USB for programming.
- CPU Status LED Indicators.
- 37.02 Total Memory.
- 2.4 ms scan time.

- Battery backed Real Time Clock (RTC).

3.5 CPU Status Indication LEDs

RED LED CONDITION	
Solid ON	Normal PLC Operation.
Fast Blink (500 ms Interval)	Low Battery or No Battery Installed.
Slow Blink (1 Second Interval)	Firmware Upgrade Process or No Firmware in the PLC
Blink Error Count every 8th Second	PLC Error / PLC Faulted

AMBER LED CONDITION	
OFF	Normal PLC Operation.
Solid ON	When Online and using Break Points in Debug Mode

GREEN LED CONDITION	
Solid ON	Normal PLC Operation.
OFF	If I/O is not configured.
	During Firmware Upgrade Process.
	During Debug Process while Online with the PLC.
	If PLC has faulted / PLC Error.

Serial Ports:

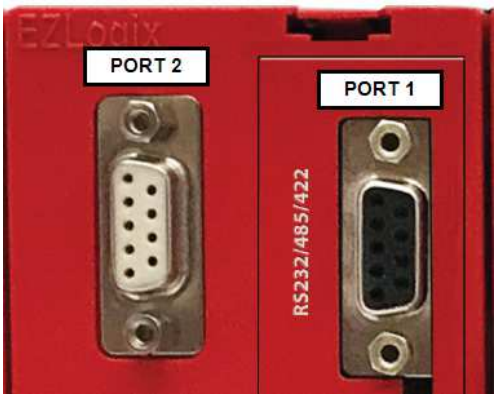

PIN CONFIGURATION	
Pin Number	Function
1	SD -
2	TXD
3	RXD
4	RD -
5	GND
6	SD +
7	CTS
8	RTS
9	RD +

Serial Port 1:
Port 1 can be used for programming the EZRack PLC from a PC or to communicate with a 3rd party device. Please use EZ-PGMCBL to connect to this port. Programming cable pin out is shown in the picture to the right.

When using a CPU with 2 serial ports, please use Port 1 for any third party communication over RS232 / 485 / 422 for use of the ASCII protocol. Modbus communication can be done using RS485 / 422 wiring.

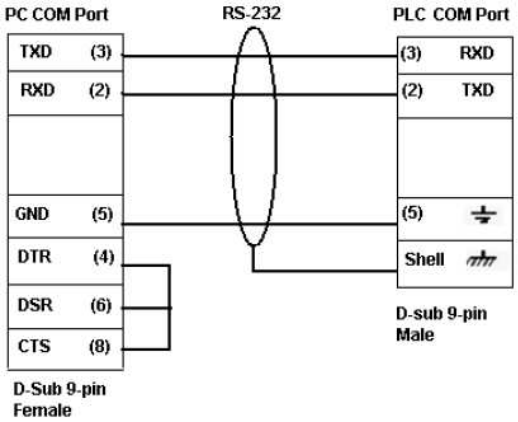

The RS 485/422 port can be accessed from EZRack PLC Designer Pro using Communication Instructions. Please refer to the software manual for information on how to configure a port to communicate with third party devices.

Note: Serial Port 2:
Port 2 can ONLY be used to program the EZRack PLC from your PC, using EZ-PGMCBL. It cannot currently be used to communicate to 3rd party devices.

3.6 Battery Backup

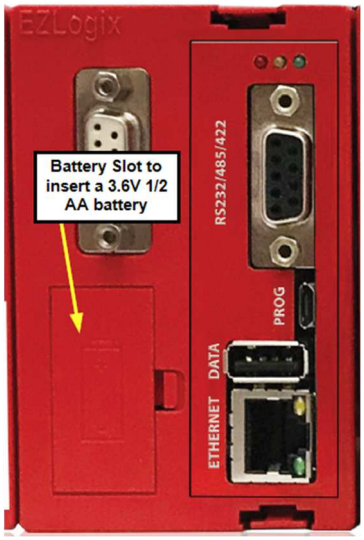

EZRack PLC CPU comes with a 3.6V ½ AA Lithium battery installed (EZ-BAT).

This battery is used to maintain retentive values in the PLC program and the PLCs real time clock (RTC). Note the user program is stored in Flash, so even during power shut-down and a dead battery, the PLC program will NOT be lost!

Typical CPU battery life is 5 years, inclusive of PLC runtime and normal shutdown periods. A Low battery LED indicator gives a low battery voltage warning.

To replace the PLC battery, we recommend following the below steps:

1. Disconnect the external power source to EZRack PLC
2. Remove the battery cover
3. Remove the battery from the slot and insert a new battery. Please make sure to match the Polarity (Note: If power is applied to the EZRack PLC, and a battery is inserted incorrectly, this can potentially cause damage to the Base Power Supply.
4. Close the battery cover and power up the EZRack PLC

3.7 CPU Operation Sequence

A good understanding of EZRack PLC's CPU operating sequence will help you achieve the proper control for your equipment or process. The flow chart on the next page shows the main tasks how the CPU controls all aspects of system operation.

Power-up Initialization
At power-up, the CPU initializes the internal electronic hardware. It also checks if all the memories are intact and the system bus is operational. It sets up all the communication registers. It checks the status of the backup battery. If all registers are go, the CPU begins its cyclic scan activity as described below.

Read Inputs
The CPU reads the status of all inputs, and stores them in an image table. IMAGE TABLE is EZRack PLC's internal storage location where it stores all the values of inputs/outputs for ONE scan while it is executing ladder logic. CPU uses this image table data when it solves the application logic program. After the CPU has read all the inputs from input modules, it reads any input point data from the Specialty modules like High Speed Counters.

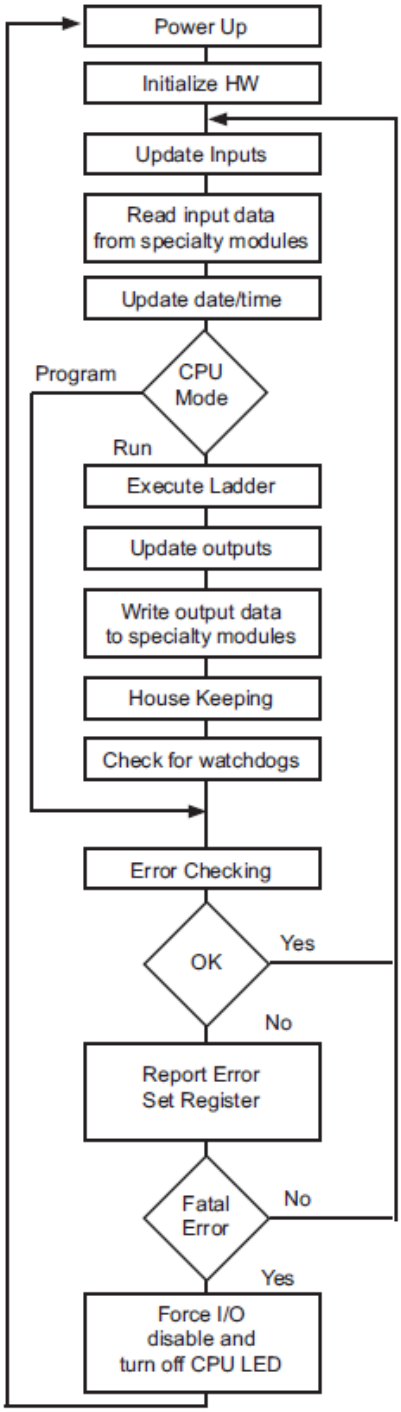

Execute Logic Program

This segment is also called Ladder Scan. The CPU evaluates and executes each instruction in the logic program during the ladder scan cycle. The rungs of a ladder program are made with instructions that define the relationship between system inputs and outputs. The CPU starts scanning the first rung of the ladder program, solving the instructions from left to right. It continues, rung by rung, until it solves the last rung in the Main logic. At this point, a new image table for the outputs is updated.

Write Outputs

After the CPU has solved the entire logic program, it updates the output image table. The contents of this output image table are written to the corresponding output points in I/O Modules. After the CPU has updated all discrete outputs in the base, it scans for the specialty modules. The output point information is sent to the specialty I/O like High Speed Counters.

Immediate Inputs/Outputs

There is a possibility that an input changes after the CPU has read the inputs. If you have an application that cannot wait until the CPU returns for the next input scan, you can use **Immediate Instructions.**

These instructions do not use the status of the input from the image table to solve the application program. The Immediate instructions immediately read the input status directly from I/O modules and update the Input table with appropriate status of input module read. Similarly, Immediate Output instructions do not wait for the CPU to complete the ladder scan. Immediate outputs are directly written to the image table and Outputs are updated accordingly.

Subroutines

The CPU executes subroutines when called for in the ladder program. These subroutines are useful in performing the same logic operation time and time again just upon one call so you do not have to repeat the rung logic over and over again.

Subroutines are also useful in executing a logical function, for example check limits, upon receiving an external interrupt from an EZRack PLC I/O module.

3.8 I/O Response Time

I/O response time is typically defined as the time required for the control system to note a change in an input point and update a corresponding output point. In a majority of the applications, the processor of a PLC responds practically instantaneously to this task. There are some applications that require extremely fast I/O scan times. The following four factors affect the I/O response time of a CPU:

1. The point in the scan period when the field input changes its state.
2. Delay time for Input module to change state.
3. CPU scan time.
4. Delay time for Output module to change state.

Normal I/O Response Time

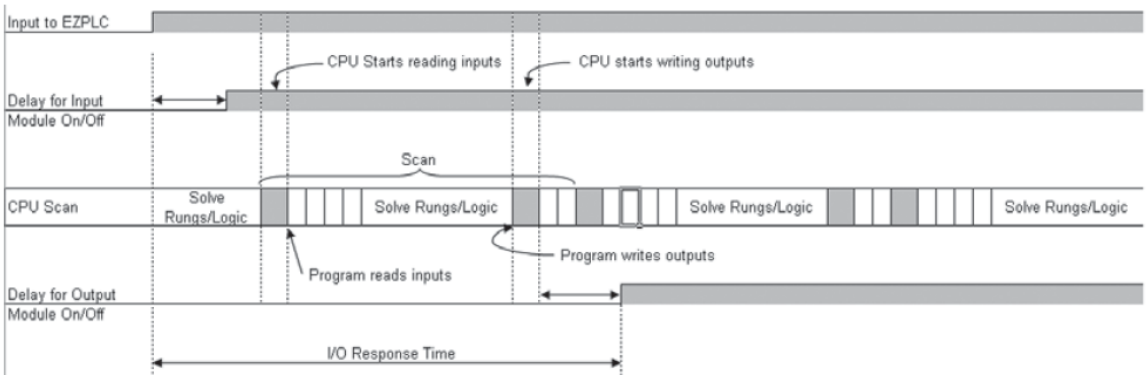

See the diagram above. The I/O response time is minimum when the I/O module gets the input change before the Read Inputs portion of the Ladder execution scan cycle. In this case the input status is read, the logic program is solved, and the corresponding output point gets updated. The total I/O response time is calculated as:

I/O Response = Delay in Input module + CPU Scan Time + Delay in Output module

Maximum I/O Response Time

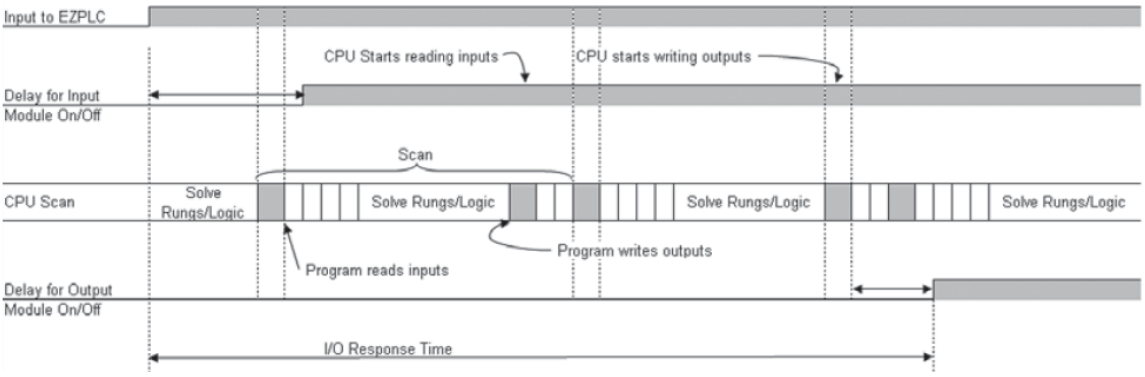

The I/O response time is maximum when the I/O module notes an input change after the Read Inputs portion of the Ladder execution scan cycle. In this case the input status gets noted only in the following Input scan. The diagram shows an example of I/O response timing for this condition. The total I/O response time is calculated as:
I/O Response = Delay in Input module + 2 times the CPU Scan Time + delay in output module.

How to get the best I/O Response time

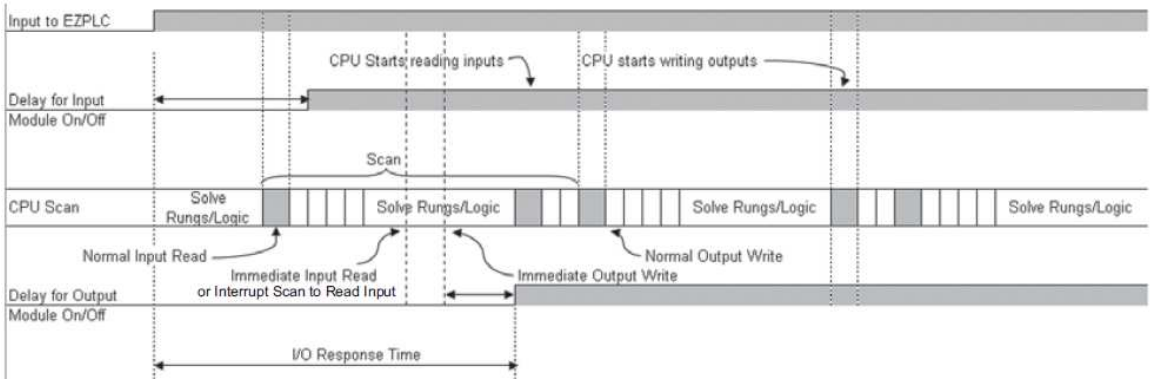

Using Interrupt subroutines and Immediate I/O instructions is the best way to optimize the I/O Response time of your EZRack PLC system. The immediate instructions update the I/O points during the ladder logic program execution.
See the EZRack PLC's Software Manual for detailed description of immediate instructions. The diagram shows how immediate input and output instructions affect the I/O response timing.
The total I/O response time is simply calculated as: *I/O Response = Delay in Input module + Instruction Execution Time + Delay in Output module + Instruction Execution Time = Immediate Input Instruction Execution + Immediate Output Instruction + Time for Execution of all Instructions in between.*
The total I/O response time for an external interrupt and a subroutine is calculated as:
Delay in Input Module + execution of subroutine + delay in output module.
As an example, upon an interrupt you can read the status of an input bit, perform a logical operation on it based upon the value of some other registers, and turn on an output in less than 50µs.

CPU Scan Time Considerations

The scan time includes all the tasks that are performed by the operating system in a cyclic manner. As discussed previously, each scan cycle is made up of several segments. Each of these segments takes a certain amount of time to execute. Among all the segments, the amount of time it takes to execute the application program is the only one that has maximum influence on total scan time. This also happens to be the one segment you can control as a user. If your application needs a smaller scan time, then you

should try to choose instructions with as fast execution time as possible. This is because different instructions take different amounts of time to execute. Your choice of I/O modules and system configuration can also affect the scan time. If you need to check the scan time, the SR7 register holds the value of the last CPU scan time. You can display this data value from the logic program.

3.9 Memory Mapping

A PLC system handles many numbers representing different types of information regarding the process. These process/machine parameters may be anything from the status of the input or output devices, timers/counters, or other data values. Before you start programming the EZRACK PLC, it would be helpful if you take a moment to familiarize yourself with how the system represents and stores the various types of data. Each PLC manufacturer has their own conventions for this in their PLCs.

Here we discuss various memory types used in the EZRACK PLCs. These memory types can be used to store a variety of information and can be used inside various Relay Ladder Logic instructions. See a description of each of the memory types below.

Discrete / Boolean Memory Type
A Discrete memory type is one bit that can be either a 1 or a 0 (ON or OFF). Discrete memory area is used for inputs, outputs, control relays, and timer/counter bits.

Word / Register Memory Type
A Word memory type is a 16-bit location that is normally used to store and manipulate numeric or ASCII data. A word memory location is also called a Register.

Mapping Conventions Used

Discrete Inputs
Discrete Inputs are denoted using an "I" pre-fix (e.g. I1, I4, etc....). The maximum number of Inputs available is 1 through 128. Discrete inputs are Read only type.

Note: All the discrete type I/O modules are mapped to Discrete Inputs. In this example, the Output bit O1 will be turned on when input I1 allows power through the rung.

Discrete Outputs
Discrete Outputs are denoted using an "O" pre-fi x (e.g. O1, O4, etc…). The maximum number of Outputs available is 1 through 128. Discrete Outputs are Read-Write type.

Note: All the Discrete type I/O Output modules are mapped to Discrete Outputs.

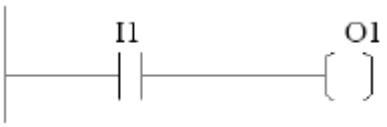

Input Register (Word)
Input Registers are denoted using an “IR” pre-fix (e.g. IR1, IR4, etc.…).
These are 16-bit Word data types (registers). The maximum number of Input Registers available is 1 through 64. You can only Read from an IR register.

Note: *All the EZRack PLC IO Analog Input, RTD, Thermocouple, and High Speed Counter modules are mapped to Input Registers.*

Output Register (Word)
Output Words are denoted using an “OR” pre-fix (e.g. OR1, OR4, etc.…).
These are 16-bit Word data types (registers). The maximum number of Output Registers available is 1 through 64. OR are Read-Write type of Word registers.

Note: *All the EZRack PLC IO Analog outputs, are mapped to Output Registers.*

Discrete Internals (Discrete)
Discrete Internals are denoted using “S” pre-fix (e.g. S1, S4, etc.…).
There are 1024 Discrete Internals available in the EZRack PLC Discrete Internals are read-write type.
Discrete internal bits are mainly used to control the user logic program. They do not represent a real physical device, like switch, output coil etc. They are only internal to the CPU. You cannot program discrete internals as discrete inputs or discrete outputs for IO modules.

In this example, memory location S1 will be powered when input I1 turns on; you can then use a discrete internal as an input in another rung.

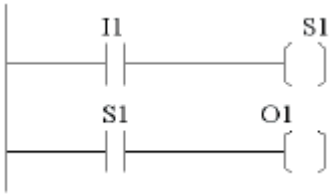

Register Internals (Word)
Internal Registers are denoted using an “R” pre-fix (e.g. R1, R4, etc.…). These are 16-bit Word data types (registers). Bits within a register can be accessed; for example R31/1.
There are 16384 Internal Registers available in the EZRack PLC “R” are Read-Write type of data registers. These registers can be used in the PLC logic in all instructions to do calculations.

Timers and Counters in EZRack PLC also uses “R” type words. For example if R1 is used for Timer_1. The next 2 consecutive registers R2 and R3 is automatically used for timer instruction for Timer Preset, Timer Accumulated, and Timer Done. Same is applicable for Counter instruction.

Since by default our registers are 16 bit, if a certain data type requires 32 bit and if we assign a tag address for example R51, the next consecutive register R52 is automatically used to support the 32 bit data type.

System Discretes (Discrete)

System Discretes are denoted using an “SD” prefix (e.g. SD1, SD4, etc.…).
There are 16 System Discretes available in the EZRACK PLC. System Discretes are of Read-Write type.
SDs are Read-Write discrete memory locations with pre-assigned functionality. There are many different types of system discretes. They help in logic program development, or provide system operating status information, etc.

System Registers (Word)

System Registers are denoted using an “SR” pre-fi x (e.g. SR1, SR4, etc.…).
These are 16-bit Word data types (registers). There are 20 System Registers available in the EZRack PLC
System registers are Read-Write type data points.

3.9a. Memory Map Table

Memory Type	Syntax	Range	Read / Write	Value Type	Mapping Example
Discrete Inputs	I	1 – 128	Read Only	Discrete	**I5**
Discrete Outputs	O	1 - 128	Read/Write	Discrete	**O1**
Input Registers	IR	1 - 64	Read Only	Word	**IR2**
Output Registers	OR	1 - 64	Read/Write	Word	**OR6**
Discrete Internals	S	1 - 1024	Read/Write	Discrete	**S21**
Register Internals	R	1 - 16384	Read/Write	Word / Discrete	**R15 , R20/1**
System Discretes	SD	1 - 27	Read Only	Discrete	**SD2**
System Registers	SR	1 - 24	See Below Table	Word	**SR13**

3.9b. System Discretes

System Discretes	Read/Write	Description
SD1	Read Only	First Scan Bit: Bit is On ONLY during the first scan of logic
SD2	Read Only	Bit toggles every100 millisecond. ON for 100 ms, and OFF for 100 ms.
SD3	Read Only	Bit toggles every second, i.e. the bit is ON for 1 Sec, and then OFF for 1 sec.
SD4	Read Only	Run Bit: Bit is ON or 1 while PLC is executing ladder logic
SD5	Enable	Setting this bit will open the port at the specified baud rate. Next, it will search for the Message Database for the defined message number in SR20.
SD6	Baud Rate	A value of 0x01 will set the baud rate to be 38400. A value of 0x00 will set the value of Baud Rate to 9600.
SD7	Error	This system discrete will be set if the Message Database is not defined or the message number is NOT defined.
SD8	Busy	This bit is set when a valid message is unable to be sent and will be retired.
SD9	Filter	This bit filters Analog Input Signals.
SD14	Battery	Bit Indicates Low Battery.
SD25	USB	Bit indicated USB IN / OUT.
SD26	EIP Scanner	Ethernet/IP Scanner Connected.
SD27	EIP Scanner	Ethernet/IP Scanner Timeout.
SD10 – 13, SD15 – SD25 are Reserved. Do Not Use.		

3.9c. System Registers

System Registers	Read/Write	Description
SR1	N.A	Reserved
SR2	N.A	Reserved
SR3	Read Only	Firmware Major Revision
SR4	Read Only	Firmware Minor Revision
SR5	Read Only	Firmware Build Number
SR6	Read Only	Watchdog Timer Register; Increments every 10 ms
SR7	Read Only	Scan Time in ms
SR8	Read Only	Read Only
SR9	Read Only	Error Message Number (see below for defined errors)
SR10	Read/Write	Real Time Clock (RTC) Second
SR11	Read/Write	RTC Minute
SR12	Read/Write	RTC Hour
SR13	Read/Write	RTC Day: 1= Sunday, 2=Monday,...7=Saturday
SR14	Read/Write	RTC Date
SR15	Read/Write	RTC Month
SR16	Read/Write	RTC Year (only 2 digits)
SR17	Read/Write	Clock Mode: 0=24 Hour, 1= 12 Hour
SR18	Read/Write	AM PM: 0= AM, 1=PM
SR19	Read/Write	Update Clock: In Ladder Logic ONLY Set to 1 to update internal clock with the values in these registers. If setting time from a computer or HMI, DON'T write to this bit.
SR20	MSG_NUM	The message number to be displayed if valid. A message number not defined in the message database is not a valid message and therefore the default message will be displayed.
SR21	EIP Scanner	Ethernet/IP Scanner IP 1
SR22	EIP Scanner	Ethernet/IP Scanner IP 2
SR23	EIP Scanner	Ethernet/IP Scanner IP 3
SR24	EIP Scanner	Ethernet/IP Scanner IP 4

The EZRack PLC reports its errors in two system registers: SR8 and SR9. SR8 uses bits for indicating errors, while SR9 uses values to indicate the same errors. When these errors occur, the PLC halts the execution of ladder logic, but continues to communicate. So an HMI can be used to detect these errors. When PLC halts execution of ladder logic, the outputs are disabled.

Status Reported in SR8 (PLC stops executing ladder logic if error detected)	
Error	Bit Set to 1
Invalid User Program	Bit 0 (lsb)
No Label for Jump	Bit 1
Invalid Move data range	Bit 2
System Error	Bit 3

Error Number Reported in SR9 (PLC stops executing ladder logic error detected)	
Error Number	Description
0	No error
1	Invalid User Program
2	No Label for Jump
3	Invalid Move data range
4	System Error
5	Either FOR without NEXT, or NEXT without FOR

EZAutomation

4

Chapter 4: Quick Start Guide (EZRack PLC Designer Pro)

In this Chapter…

4.1 EZRack PLC Designer Pro Software Requirements & Installation… 4-68
4.2 Creating a New Project and Transfer to EZRack PLC 4-75

4.1 EZRack PLC Designer Pro

EZRack PLC Designer Pro is an intuitive and simple to use Relay Ladder Logic (RLL) Editor for programming EZ Automation's EZRack PLC.

System Requirements

The EZRack PLC Designer Pro works on Windows PCs running Windows XP, 7 or Windows 10 and requires at least 60 MB of free space on a hard drive for installation. Minimum 4GB System RAM is required.

Use an EZ-PGMCBL cable, EZ-WiFi module (EZ-WIFI), Micro-USB (EZ-PGMCBL-LGX), or a standard Ethernet cable (RJ45) to transfer/write your program from your PC to EZRack PLC.

Note: Only after initial setup of the IP address, EZRack PLC can be connected over Ethernet.

Installation

The EZRack PLC Designer Pro is distributed as a single setup file. The setup file for the editor EZRack PLC Designer Pro 2.xx.xx (FULL) Setup.exe

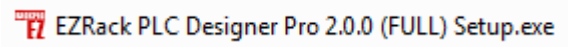

Installation of the EZRack PLC Designer Pro is quick and simple. Just run the setup file and follow the on-screen instructions. The default directory where the software installs is **"C:\Program Files (x86)\EZAutomation\EZRack PLC Designer Pro**. You may also choose to install EZRack PLC Designer Pro in another directory as specified in installation settings.

To Install

Below are the detailed instructions for installing the software. Just follow the instructions step by step to install EZRack PLC Designer Pro on your hard drive.

1. Double click on the Setup file. It will verify the installer files.

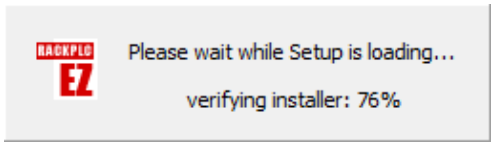

Once verifying is complete, it will show you the next window.

Click “Next” button.

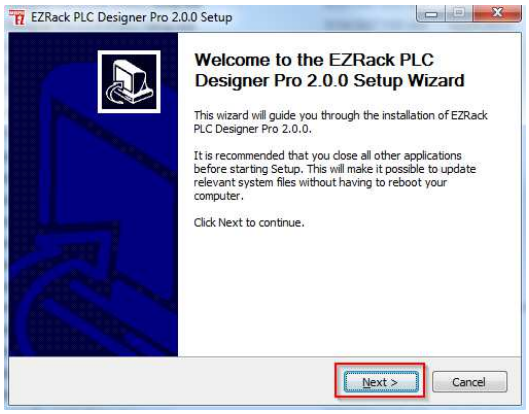

2. Please read the License Agreement text and if you accept,
   Click on “I Agree”

3. The setup program will display the dialog box below to allow you to choose the installation folder. As a default, the folder is **"C:\Program Files (x86)\ EZAutomation \EZRack PLC Designer Pro**.

   Click the “**Install”** button to start installation.

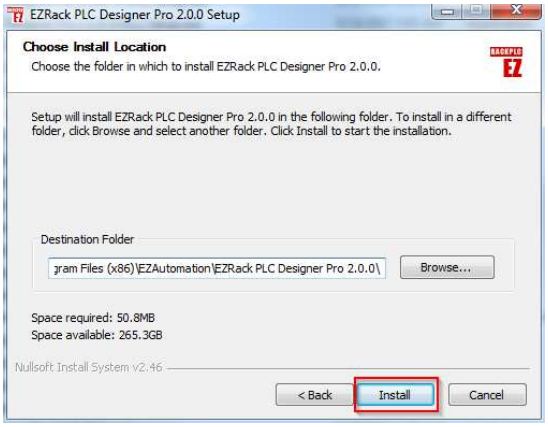

4. During installation you will see a dialog box which will list in detail the files being copied to your hard drive for installation. When finished, click on “Next” button.

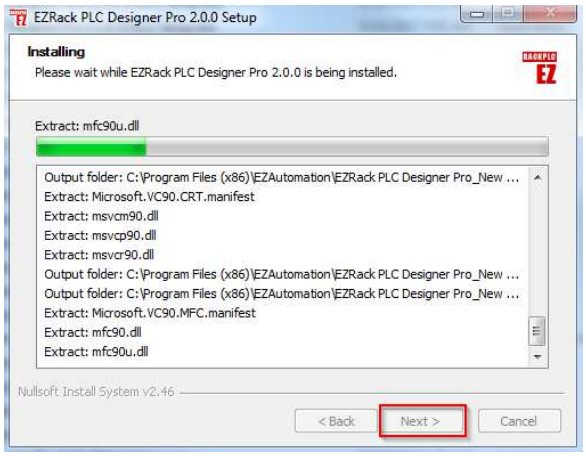

5. Click on Finish. The setup program will place a shortcut icon on your desktop.

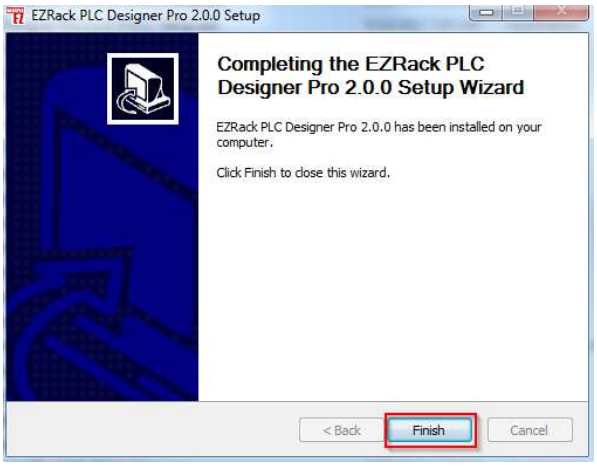

4.1 Creating a new Project on EZRack PLC Designer Pro

- Plug in all the I/O modules to your EZRack PLC base.
- Connect the Programming cable from your computer to the EZRack PLC CPU.
- Power up your unit using 24 VDC or 110/220 VAC, depending on your base model.

You can start the EZRack PLC Designer Pro in one of the following 2-ways:
1. Double Click the EZRack PLC Designer Pro shortcut Icon on your desktop.
2. Select the program using **Start>All Programs>EZAutomation>EZRack PLC Designer Pro.**

The dialog box allows you to select Programming mode, Project folder location, and Project Name. In addition, you can configure the EZRack PLC I/O base (defining I/O module locations and addresses) from this dialog box.

Step 1: Select ACTION

Open / New Project:
Select this mode to create a new project or edit an existing program in OFFLINE mode.

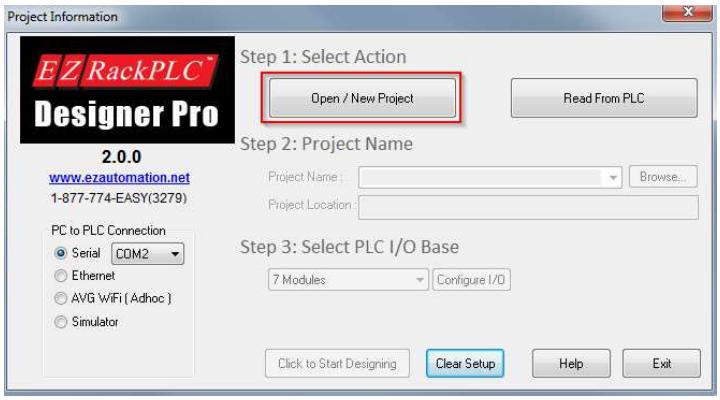

Step 2: Select Project Name

Click on the "Browse" button to navigate to a folder where you want to save your project. Give it a name; for this instance, "SAMPLE". Click on "OPEN".

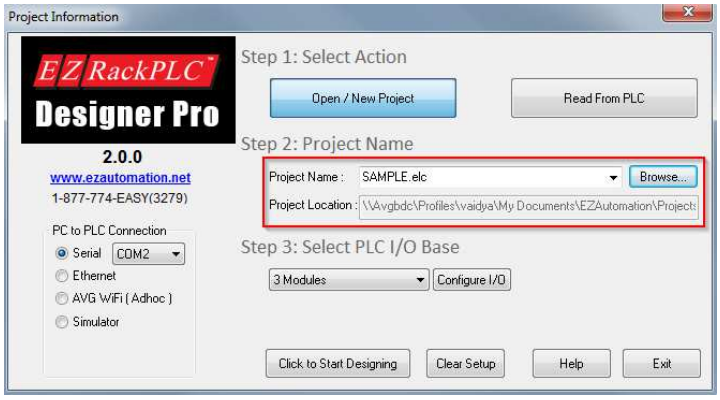

Step 3: Selecting and Configuring I/O Base

Select the I/O base for your PLC. Currently, EZRack PLC offers I/O bases for 3, 5, and 7 slots.
After selecting the I/O base size, click on the **Configure I/O** button to define the placement and the addresses of the I/O modules.

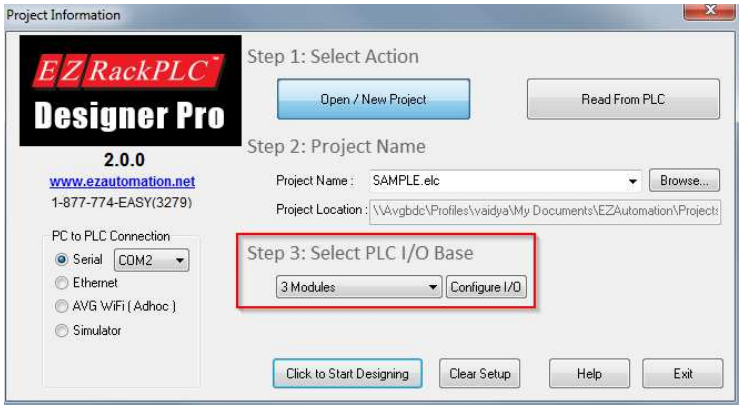

To configure a module on a position, double click the row corresponding to the position number (say M1) or click the **Add/Edit** button. Select the module type from the available modules drop down list.
OR
You can also **Auto Configure** the IO Modules by clicking the "Auto Configure IO Modules" button. This reads back information from the PLC and automatically fills in the modules which are currently plugged in to the base. Please make sure that the PC and PLC are connected (either Serially, Micro USB, or over Ethernet). The system will then ask you to confirm the type module and whether you would like to change that position to this modules.

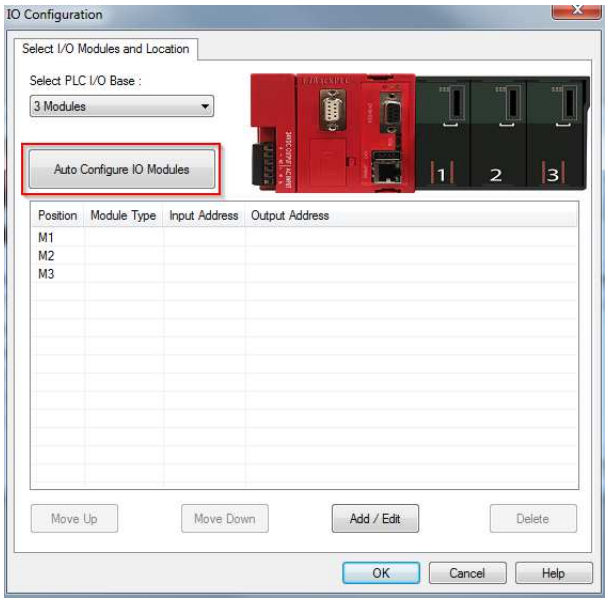

<u>I/O Names and Addresses will be automatically created in the tag database corresponding to the I/O modules selected during I/O configuration.</u>

Please note: certain modules such as "Sinking" or "Sourcing" for Digital Outputs and "Voltage" or "Current" for Analog modules cannot be differentiated so make sure the correct module is being selected.

Step 4: Click on “Click to Start Designing” button at the bottom of the main window to start designing your ladder logic. You will see how the software looks in the next picture.

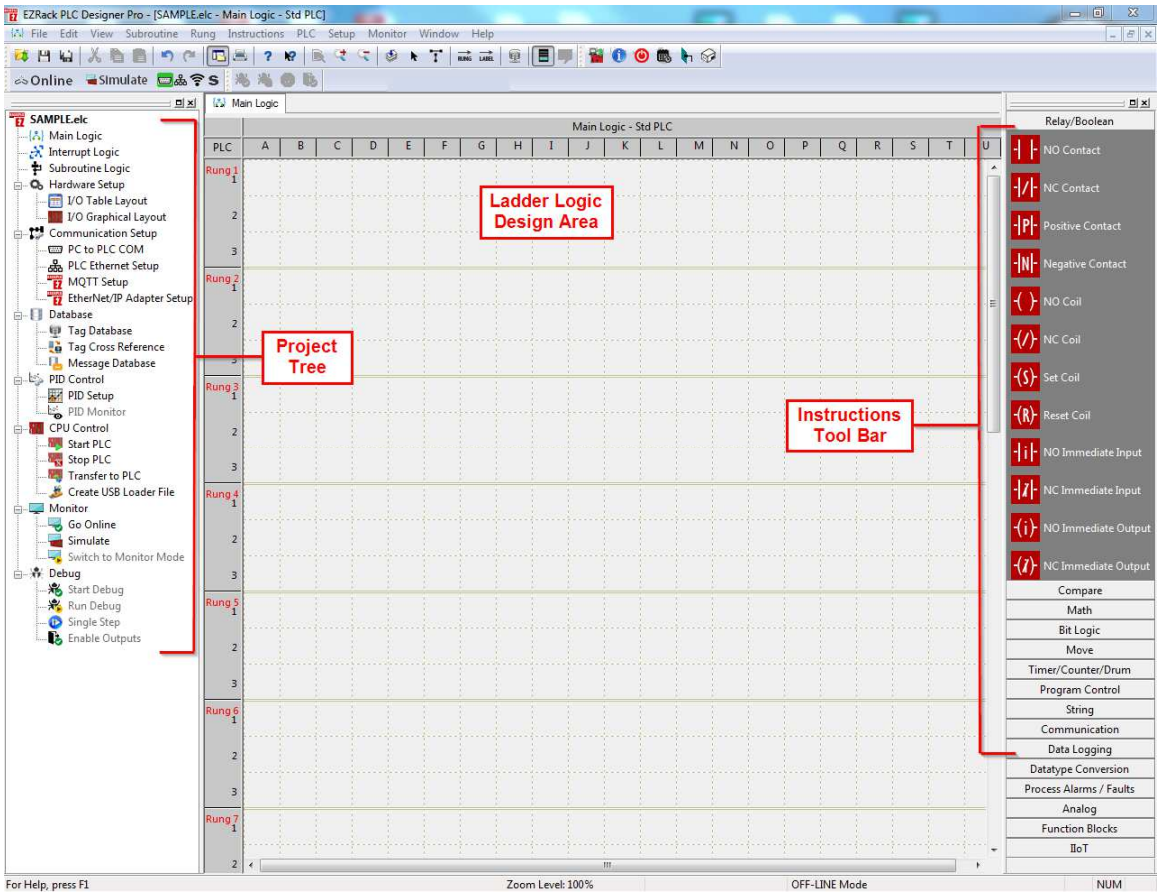

Below picture shows the tag database automatically populated.
For example, if you configure a Digital Input module to be plugged in slot 1 of the EZRack PLC, the Tag names will be populated in the tag database as “M1.Input_1”. M1 stands for slot 1, if you plug the same module in slot 2, tag address will be changed to “M2.Input_1”.

User can change the name of the tag, it should be in **M1.**xxxxxx format. “xxx” is user defined name. For example “M1.START MOTOR”.

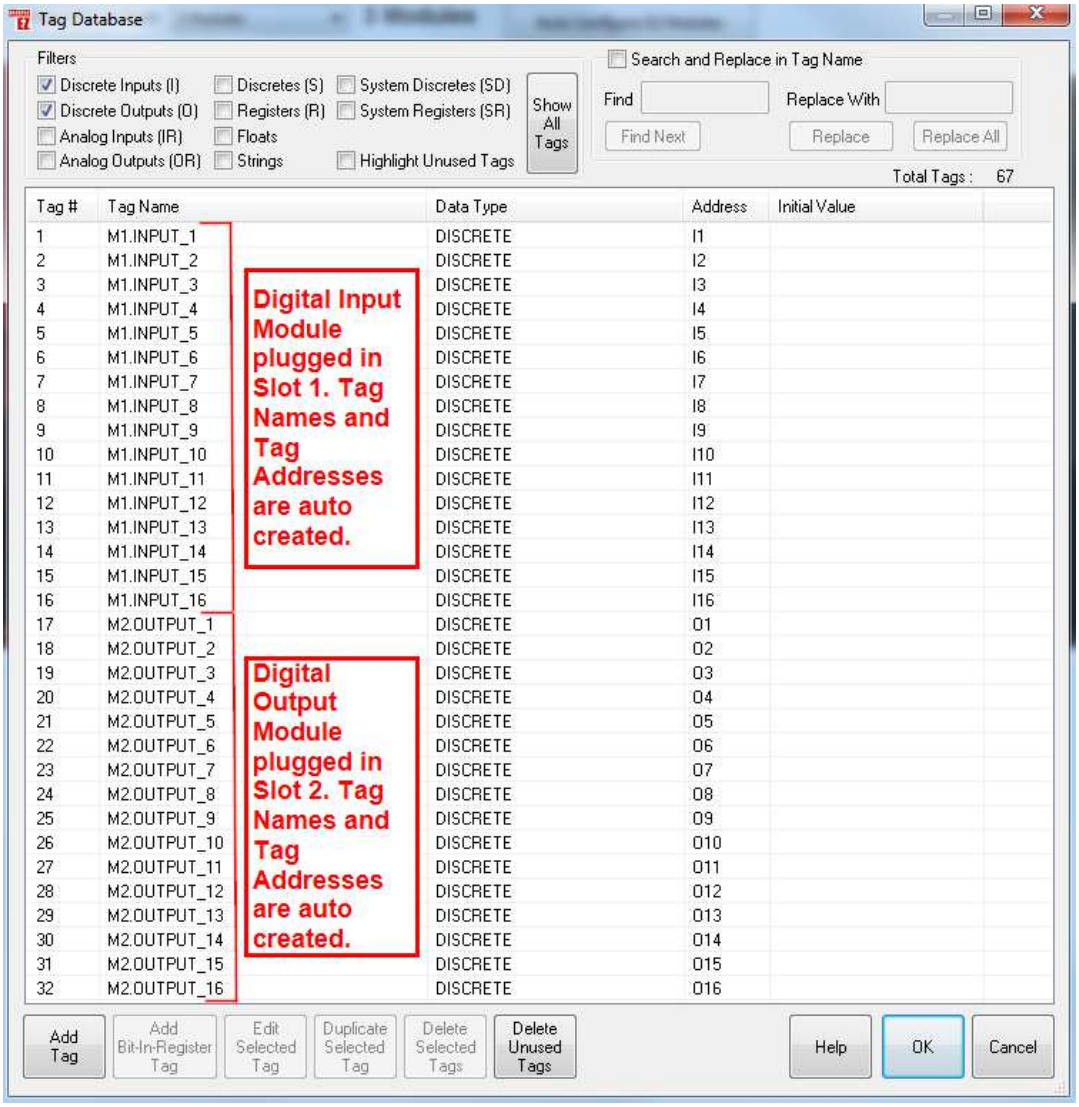

Step 5: Create Simple Logic

On the right hand side of the programming software, please select "NO Contact" from the Relay/Boolean Toolbar by single clicking on it and place it on the extreme left to connect it to the power rail and double click on it to edit.
Use the drop down menu to select the Input name and number. Click on "OK"

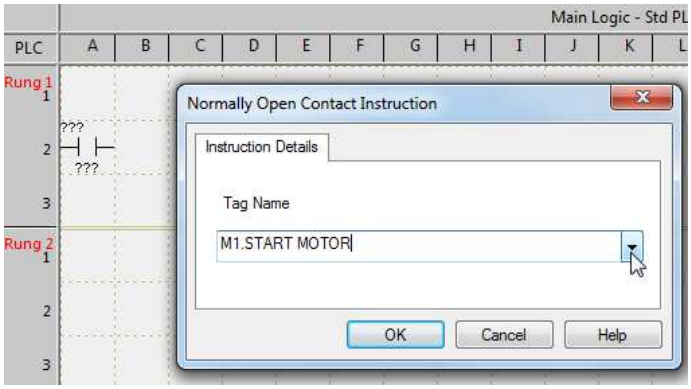

Now we can use a "NO Coil" from the Relay/Boolean Toolbar by single clicking on it and placing it to connect it to the "NO Contact". You can use the line tool to connect these two instructions together.

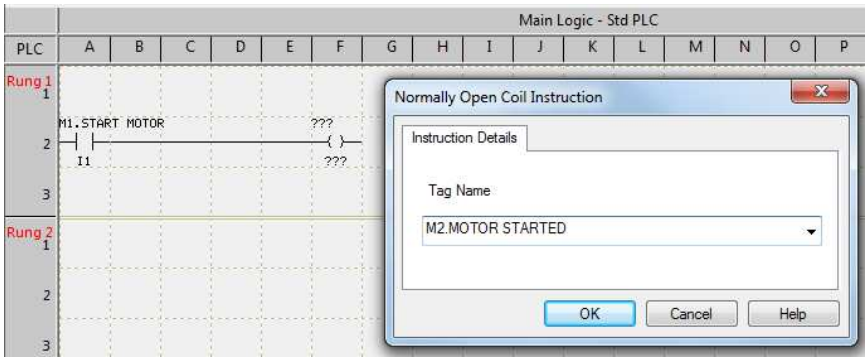

Edit the "NO Coil" by double clicking on it. Use the drop down menu under tag name to select the output name or number and click on "OK"

The logic will look like this.

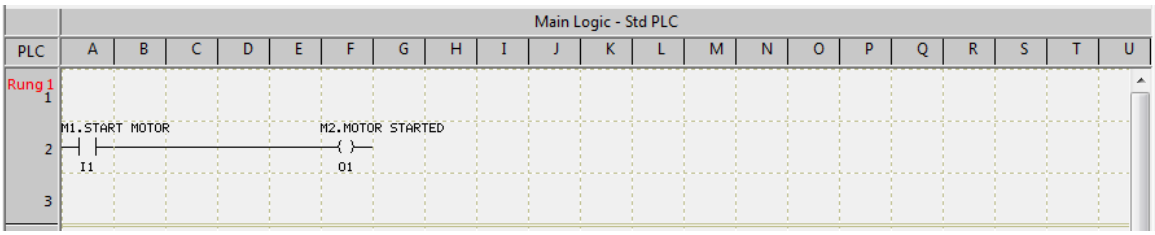

Please note: The right hand side of the instruction need not be connected to the right power rail. It can be left open.

You are now done with writing your logic, Please transfer it to the EZRack PLC by either going to FILE → Transfer to PLC or by using the short cut icon on the top menu bar.

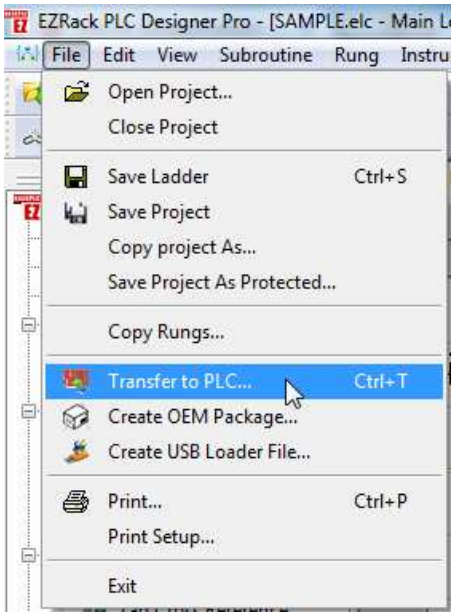

Or

When the power flows through Input 1 (M1.START MOTOR), Output 1 (M2.MOTOR STARTED) will be turned ON.

Congratulations, you have now created your first EZRack PLC Project.
Welcome to the EZRack PLC family.

Appendix A: EU Information

EZRack PLC is manufactured in compliance with European Union (EU) Directives and carries the CE mark. It has been tested under CE Test Standard #EN55011, and is submitted for UL Certification.

Please Note: Products with CE marks perform their required functions safely and adhere to relevant standards as specified by EU directives provided they are used according to their intended purpose and that the instructions in this manual adhere to. The protection provided by the equipment may be impaired if this equipment is not used in accordance with this manual. Only replacement parts supplied by EZAutomation or its agents should be used.

SELV Circuits: All electrical circuits connected to the communications port receptacle are rated as Safety Extra Low Voltage (SELV).

Environmental Specifications:
Operating Temperature: - 20 to 60°C (-4 to 140°F)
Storage Temperature: - 40 to 85°C (-40 to 185°F)
Operating Humidity: 10 – 95% R.H, noncondensing.
Air Composition: No corrosive gasses permitted.

Preventative Maintenance and Cleaning: No special preventative maintenance is required.

Contact Information:

Technical Support: If you still need assistance, please call our technical support at 1-877-774-3279 or email us at techsupport@ezautomation.net

Customer Service: 1-877-774-3279 or email us at sales@ezautomation.net

Website: www.EZAutomation.net

Address: EZAutomation, division of AVG
4140 Utica Ridge Rd.
Bettendorf, IA 52722

DESIGNED, MANUFACTURED and DISTRIBUTED by
4140 Utica Ridge Rd. • Bettendorf, IA 52722-1327

AVG/EZAutomation

Phone: **1-877-774-3279** • Fax: **1-877-775-3279** • ***www.EZAutomation.net***